Identification of an *ADAMTS2* frameshift variant in a cat family with Ehlers-Danlos syndrome

Rebecca Simon[1,a], Sarah Kiener[2,3,a], Nina Thom[4], Laura Schäfer[4], Janina Müller[5], Elfi K. Schlohsarczyk[5], Ulrich Gärtner[6], Christiane Herden[5], Tosso Leeb[2,3,b,*], Gesine Lühken[1,b,*]

[1] Institute of Animal Breeding and Genetics, Justus Liebig University, Giessen 35390, Germany
[2] Institute of Genetics, Vetsuisse Faculty, University of Bern, Bern 3001, Switzerland
[3] Dermfocus, University of Bern, 3001 Bern, Switzerland
[4] Small Animal Clinic, Justus Liebig University, 35392 Giessen, Germany
[5] Institute of Veterinary Pathology, Justus Liebig University, 35392 Giessen, Germany
[6] Institute of Anatomy and Cell Biology, Justus Liebig University 35385 Giessen, Germany

[a]Contributed equally (shared first authors)
[b]Contributed equally (shared senior authors)

***Corresponding authors:** Tosso Leeb (tosso.leeb@unibe.ch) and Gesine Lühken (gesine.luehken@agrar.uni-giessen.de)

Running head: *ADAMTS2* variant in cats with EDS

Keywords: skin, dermatology, dermatosparaxis, veterinary medicine, *felis catus,* whole genome sequence, precision medicine

Abstract

We investigated four European domestic shorthair kittens with skin lesions consistent with the dermatosparaxis type of the Ehlers-Danlos syndrome (EDS), a connective tissue disorder. The kittens were sired by the same tomcat, but were born by three different mothers. The kittens had easily torn skin resulting in non-healing skin wounds. Both clinically and histologically, the skin showed thin epidermis in addition to inflammatory changes. Changes in collagen fibers were visible in electron micrographs. The complete genome of an affected kitten was sequenced. A one base pair duplication leading to a frameshift in the candidate gene *ADAMTS2* was identified, p.(Ser235fs*3). All four affected cats carried the frameshift duplication in a homozygous state. Genotypes at this variant showed perfect co-segregation with the autosomal recessive EDS phenotype in the available family. The mutant allele did not occur in 48 unrelated control cats. *ADAMTS2* loss-of-function variants cause autosomal recessive forms of EDS in humans, mice, dogs, cattle and sheep. The available evidence from our investigation together with the functional knowledge on *ADAMTS2* in other species allow to classify the identified *ADAMTS2* variant as pathogenic and most likely causative variant for the observed EDS.

Introduction

The Ehlers-Danlos syndrome (EDS, *Fibrodysplasia elastica*) represents a group of hereditary disorders associated with defects in collagen biosynthesis (Malfait et al. 2017). This heterogenous group of connective tissue disorders is named after Edvard Ehlers and Henri-Alexandre Danlos who independently described human patients with the syndrome in detail at the beginning of the 19th century (Parapia and Jackson 2008).

Signs may vary between species and the different types of EDS, e.g. joint hypermobility is primarily observed in humans. However, a universally occurring feature is the hyperelasticity of the skin and the resulting tendency to skin tears. One type of EDS, called dermatosparaxis EDS, was first observed and its biochemical background described in detail in cattle (Lapière et al. 1971) (OMIA 000328-9913). The connective tissue shows alterations of its normal structure due to a deficiency of the enzyme procollagen peptidase, which catalyzes the formation of type 1 procollagen (Lapière and Nusgens 1993). The structurally abnormal dermal collagen shows decreased strength, therefore skin wounds can already be caused by minimal trauma like handling or even normal activity (Counts et al. 1980; Crosaz et al. 2013; Hargis and Myers 2017). Histologically, dermatosparaxis skin shows variations in terms of the caliber of collagen fibers, which are irregular, undirected, and loosely arranged (Colige et al. 2004; van Damme et al. 2016). Variants in the *ADAMTS2* gene are known to cause dermatosparaxis in humans (Colige et al. 2004; van Damme et al. 2016) as well as in cattle (Colige et al. 1999), sheep (Zhou et al. 2012; Monteagudo et al. 2015; Joller et al. 2017), and dogs (Jaffey et al. 2019). The *ADAMTS2* gene encodes ADAM metallopeptidase with thrombospondin type 1 motif 2, also termed procollagen I N-proteinase, which cleaves the propeptides of procollagen type I and II (Wang et al. 2003). The role of different ADAMTS proteases for normal collagen biosynthesis and in dermatosparaxis EDS has been reported (Le Goff et al. 2006).

Different forms of EDS are known to occur in humans (Malfait et al. 2017; Malfait et al. 2020) as well as in several animal species, including cattle (Hanset and Lapière 1974; Carty et al. 2016; Jacinto et al. 2020), dog (Bauer et al. 2019; Jaffey et al. 2019; Kiener et al. 2022b), sheep (Joller et al. 2017), cat (Counts et al. 1980; Weingart et al. 2014; Spycher et al. 2018), horse (Eßer et al. 1999) and mink (Hegreberg 1975). Diagnosis is mainly based on the clinical appearance of the affected animal, histopathological examination of the collagen fibrils, and genetic analyses. In domestic cats, until now, only one gene, *COL5A1*, was reported to be involved in autosomal-dominant EDS (Spycher et al. 2018; Kiener al. 2022a). Herein we report the results of a comprehensive clinical, pathological and genetic analysis of dermatosparaxis EDS in a cat family.

Materials and methods

Ethics statement

All cats in this study were privately owned. The index case, a deceased kitten, was transferred to the Institute of Veterinary Pathology of the Justus Liebig University Giessen for diagnostic purposes. The other three affected kittens were examined and treated at the Small Animal Clinic

of the Justus Liebig University Giessen. All animals in this study were examined with the consent of the owner and handled according to good ethical standards. The "Cantonal Committee for Animal Experiments" (Canton of Bern; permit 71/19) and the Regional Council of Gießen (reference number 19 c 20 15 h 02 Gi 19/1 KTV 22/2020) approved the collection of samples from control cats.

Animals

A group of free roaming farm cats (European domestic shorthair) is presented here. Initially, one female kitten with skin lesions resembling the appearance of dermatosparaxis was found dead. Later, three additional affected kittens were observed in two subsequent litters. All three litters that produced affected kittens were apparently from the same sire (tomcat). Subsequently, as many cats as possible (n=27) from this semi-feral population, including mothers, littermates and the tomcat, were captured for sampling and visual inspection. Despite the free roaming lifestyle of the cats, the farmer and owner of the cats was able to provide information about the kinship of the population.

Clinical and pathological examination

Standard clinical and pathological examinations were done. Necropsy was performed on all affected kittens and representative organ samples were fixed in 10% neutral buffered formalin, embedded in paraffin and stained with hematoxylin and eosin (HE). Additionally, histochemical stains were performed on the skin, included periodic acid–Schiff reaction (PAS) and Masson Trichrome stain. The skin of one affected kitten was examined by transmission electron microscopy. For this purpose skin samples were fixed with 1.5% glutaraldehyde and 1.5% formaldehyde (freshly made from paraformaldehyde) in 0.15 M HEPES buffer. For epoxy resin embedding, cells were postfixed in 1 % osmium tetroxide in aqua bidest., stained in half-saturated watery uranyl acetate, dehydrated in an ascending ethanol series and finally embedded in Agar 100 (Agar scientific Ltd. UK). Ultrathin sections were cut using an ultramicrotome (Reichert Ultracut E, Leica) and examined with a transmission electron microscope (Zeiss EM 902). Digital images were captured with a slow-scan 2K CCD camera (TRS, Tröndle, Moorenweis, Germany).

DNA extraction

For the purpose of whole genome sequencing, genomic DNA was isolated from muscle tissue of the deceased kitten using a Maxwell RSC Tissue DNA Kit and a Maxwell RSC instrument (Promega, Dübendorf Switzerland). For genotyping, DNA extraction from buccal swaps (sterile transport swabs, COPAN Italia SpA, Brescia Italy) was executed using the Gentra Puregene Tissue Kit (QIAGEN GmbH, Hilden Germany) following the manufacturer's instructions.

Whole genome sequencing, variant calling and variant filtering

An Illumina TruSeq PCR-free DNA library with ~330 bp insert size of the deceased affected cat was prepared and sequenced on a NovaSeq 6000 instrument with 23× coverage (Illumina, San Diego, CA, USA). The sequence data were submitted to the European Nucleotide Archive with the study accession PRJEB7401 and sample accession SAMEA7376282. Mapping and alignment to the

F.catus Fca126 mat1.0 reference genome assembly were performed as described (Jagannathan et al. 2019). Variant calling was performed using GATK HaplotypeCaller (McKenna et al. 2010) in gVCF mode as described (Jagannathan et al. 2019). Functional effects of the called variants were predicted with the SnpEff version 4.3t software (Cingolani et al. 2012) together with NCBI annotation release 105 for the F.catus_Fca126_mat1.0 genome reference assembly.

For variant filtering, we used 77 control genomes (Table S1). A hard filtering strategy was employed, which required either a homozygous alternate (1/1) or heterozygous (0/1) genotype call in the affected kitten while the 77 control cats were required to have either a homozygous reference (0/0) or missing (./.) genotype call in the vcf-file (Table S2). Variants in 20 known functional candidate genes for EDS obtained from Kiener et al. 2022b were prioritized.

Genotyping by Sanger sequencing

The *ADAMTS2* variant was genotyped by Sanger sequencing of PCR amplicons (XM_023254116.2:c.698dup or ChrA1:90,995,621dup (F.catus_Fca126_mat1.0 assembly). A forward primer 5'-TTCAATGTACCTGGCAAGCC-3' and a reverse primer 5'-ATGCTGCAGATGGTGACTAC-3' were designed with the software Primer3 (Untergasser et al. 2012) to produce a fragment with a size of 169 bp (wild type) or 170 bp (mutant) with standard PCR conditions. Purified PCR products were sent to LGC Genomics GmbH, Berlin (Germany) for Sanger sequencing, using the reverse primer. A similar approach was used to genotype the *COL1A2*:XM_003982764.6:c.2384G>A variant, using 5'- TCCCTAGAGCTGCCATTGAT-3' and 5'-GAGGCAAGGTTGTTTGGCTA-3' as forward and reverse primer, respectively (152 bp fragment size).

Parentage testing

A DNA profile, based on 16 microsatellite markers, for parentage verification was commissioned from Laboklin GmbH & Co KG (Bad Kissingen, Germany). It was carried out with genomic DNA from the three mother cats, the four affected kittens and the presumed father.

Results

Clinical and pathological findings

The initial case, a deceased female kitten of unknown age was in good body condition (weight: 1 kg). Body and tissues were affected by moderate postmortem changes. In addition to moderate anemia, the skin was markedly thin and soft and was easily torn. Large portions of the head, as well as the left side of the neck, exhibited extensive alopecia and severe multifocal ulcerative and purulent dermatitis, occasionally accompanied by partially detachable dark brown crusts up to 1 cm thick (Figure 1A). Additionally, there was a prolapse of the rectum (Figure 1B) as well as an invagination in the colon involving 3 cm of the large intestine with venous infarction of the invaginated part (intussusceptum). A diaphragmatic hernia, through which the stomach and large portions of the omentum majus entered the thoracic cavity (Figure 2), were also observed. The urea concentration in the aqueous humor was 20 mmol/l (reference value: 5.0 – 11.3 mmol/l).

Three additional affected kittens from the following litters showed similar dermatological lesions as the first kitten (Figure 1C-D). During handling, the skin was easily torn and preexisting wounds were exacerbated even by gentle manipulation. Wounds in different stages and sizes were present. The head, ventral neck and front legs and axillar region were most severely affected in all three cats, distribution of the lesions was more or less symmetrical. In addition, these kittens showed significantly reduced growth compared to their unaffected littermates. One of the cats was euthanized at first presentation due to an impaired general condition. In two of the three kittens a symptomatic therapy with topical wound care and systemic anti-infective treatment was attempted, but due to progressive deterioration, both cats were humanely euthanized 5 days and 33 days after start of therapy, respectively.

Histological examination revealed that the skin of the initial case was multifocally affected by both a mild to severe chronic pyogranulomatous and an acute ulcerative and suppurative dermatitis accompanied by serocellular crust formation, which contained bacteria (Figure 3A). Adjacent to the ulcerative lesions, cleft-formation at the dermo-epithelial junction was often observed (Figure 3A). The Periodic acid-Schiff reaction revealed that the basement membrane zone formed the floor of the cleft (Figure 3B). The collagen fibers stained uniformly blue with Masson Trichrome stain (Figure 3C) and showed a loose arrangement around the clefts. In the unaffected skin epidermis, dermis and adnexa were present and the collagen fibers were arranged physiologically. The invagination in the colon was accompanied by a moderate to severe chronic suppurative colitis characterized by a moderate to high amount of mononuclear cells infiltrating the intussusceptum while the part of the colon containing the invaginated part (intussuscipiens) was infiltrated with macrophages and neutrophil granulocytes.

Electron microscopy of the skin of one of the affected kittens showed severe abnormalities in the collagen fibers. The longitudinal section showed electron-loose parts framed by electron-dense filaments suggesting an “empty-tube” appearance. Cross section of collagen fibers showed electron dense ribbon-like structures up to 250 nm in diameter (Figure 4).

Genetic Analyses

The genome of one affected cat was sequenced at 23x coverage. Genome sequences from 77 cats representing 14 breeds and 35 random-bred individuals and one of unknown origin were used as controls. Filtering for private protein-changing variants in the affected cat identified two potentially pathogenic variants in known EDS candidate genes, a heterozygous missense variant in *COL1A2* and a homozygous frameshift variant in the *ADAMTS2* gene (Table 1; Table S2). Genotyping of cats from the pedigree excluded the *COL5A1* variant as the genotypes did not co-segregate with the EDS phenotype and four unaffected cats were homozygous for the mutant allele (Table S3). The *COL1A2* variant was XM_003982764.5:c.2384G>A or XP_003982813.1:p.(Arg795Gln).

Visual inspection of the short-read alignments in IGV (Robinson et al. 2011) indicated a homozygous insertion of a single base pair in exon 4 of the 22 annotated exons of the known

candidate gene *ADAMTS2* (Figure 5). This variant can be designated as XM_023254116.2:c.698dup or XP_023109884.2:p.(Ser235Glnfs*4). It truncates nearly 80% of the wild type *ADAMTS2* open reading frame. The genomic variant designation is ChrA1:90,995,621dup (F.catus_Fca126_mat1.0).

The *ADAMTS2* variant was confirmed via PCR and follow-up Sanger sequencing. All available cats (n=31) were genotyped for the variant (Figure 6; Table S3). All four affected kittens were homozygous for the mutant allele. Twenty cats were heterozygous, including the parents of affected kittens as well as some of their littermates. The remaining seven cats were homozygous for the wild type allele. Microsatellite-based parentage testing confirmed the paternity of the suspected tomcat for all three litters, in which the four affected kittens occurred (Table S4).

Discussion

EDS in humans is known to occur in 13 different subtypes including the autosomal recessive dermatosparaxis EDS (dEDS) caused by *ADAMTS2* variants (Malfait et al. 2017). So far, in domestic cats only classical EDS (cEDS) caused by autosomal dominant *COL5A1* variants has been characterized at the molecular level (Spycher et al. 2018; Kiener et al. 2022a)

In this study, we describe a dermatosparaxis EDS phenotype in domestic cats due to autosomal recessive loss of function in the *ADAMTS2* gene by a comprehensive clinical, pathological and genetic analysis in a cat family. *ADAMTS2* loss-of-function variants cause autosomal recessive forms of EDS in humans, mice, dogs, cattle and sheep but have so far not been reported in domestic cats.

During the gross and histological examination of the initial case (first deceased kitten), the skin appeared easily torn. Almost the entire head area and the left side of the neck showed focal alopecia and severe ulcerative purulent dermatitis with serocellular crusts. Similar clinical findings were present in the dermatological examination of the other three kittens, with the exception that fresh wounds with less crusting and without secondary pyoderma predominated. In all affected cats, the head, neck and front legs /axilla were most severely affected, which probably resulted from physiological friction and strain to the skin in these body regions. These dermatological findings were consistent with the presence of collagen dysplasia (dermatosparaxia) in other species (overview given by (Vroman et al. 2021). For example, in hereditary equine regional dermal asthenia (HERDA), body sites exposed to stress or pressure are most prone to similar lesions (Rashmir-Raven 2013). Comparable dermatological phenotypes can also be observed when caused by variants in *ADAMTS2*, such as in dogs (Jaffey et al. 2022). In previously reported cats with EDS, in which the molecular cause was not identified, skin fragility and predisposition to skin tears was also described as the main clinical finding (Crosaz et al. 2013; Hansen et al. 2015). Normal handling or even the normal activity of the animal may lead to skin injuries (Counts et al. 1980; Crosaz et al. 2013; Hargis and Myers 2017).

Hypermobility of the joints, as described for examples in humans and dogs with EDS, has not been described in cats (Mauldin and Peters-Kennedy 2015) similar to the present cases. Histologic

examination of the skin showed no abnormalities except for focal loose arrangement of collagen fibers and cleft formation. This might result from the severe ulceration and inflammation and has to be differentiated from subepidermal blistering diseases. Lack of joint hypermobility and variation regarding the caliber of the collagen fibers with irregular, undirected, and loose arrangement have been described as typical for dermatosparaxis EDS (Gross et al. 2008). Apart from multifocal loose arrangement of collagen fibers, the skin of the necropsied cat showed a regular anatomical morphology, however, histologic findings may vary in cats with collagen dysplasia ranging from no dermal changes up to a thinner dermis with fine collagen fibers separated by an increased amount of ground substance. Normal collagen fibers stain uniformly blue with Masson Trichrome stain as in this case whereas abnormal fibers have segmental red staining areas that are birefringent under polarized light (Butler 1975; Holbrook et al. 1980; Sequeira et al. 1999; Crosaz et al. 2013; Mauldin and Peters-Kennedy 2015).

Due to the postmortem changes in most of the affected kittens, the skin of only one cat was examined by electron microscopy and revealed empty tube appearance of collagen fibers typical for EDS. The inflammatory skin lesions were likely due to secondary infections and not primarily associated with dermatosparaxis EDS. The same applies in all likelihood also for the follicular hyperplasia of the mesentric lymph nodes. A hernia diaphragmatica (Figure 2), also observed in one of the present cases, has been previously described in cats with collagen dysplasia (Benitah et al. 2004). It is also possible that the rectal prolapse (Figure 1B) represented a consequence of the collagen disturbances due to dermatospraxis EDS but might also have resulted from the colo-colic intussusception. The accompanied chronic purulent colitis suggested the presence of a bacterial infection and might have been the cause for intussusception (Uzal et al. 2016). Hernia diaphragmatica or rectal prolapse or any other clinical sign except the cutaneous lesions were not present in other kitten affected by EDS.

Different variants within the *ADAMTS2* were already proven to be causative for cases of dermatospraxis EDS in humans (van Damme et al. 2016), sheep (Zhou et al. 2012; Monteagudo et al. 2015; Joller et al. 2017), cattle (Colige et al. 1999), and dogs (Jaffey et al. 2019; Jaffey et al. 2022). The human ClinVar database lists NM_014244.4(*ADAMTS2*):c.691del as a pathogenic variant. This variant also introduces a frameshift at a position comparable to the feline c.698dup variant. The feline *ADAMTS2* frameshift variant detected herein therefore represents a highly plausible candidate variant for the EDS phenotype in the affected cats. The causality of the *ADAMTS2* frameshift variant is further supported by the perfect co-segregation of genotypes with phenotypes in an extended pedigree with 31 cats, of which four were affected.

When we apply the ACMG/AMP consensus criteria for human diagnostics (Richards et al. 2015) to the feline *ADAMTS2*:c.698dup frameshift variant, we have one very strong evidence for pathogenicity (null variant in a gene, where loss of function is a known mechanism of disease, PVS1), one moderate criterion (mutant allele is absent from 77 control genomes, PM2) and one supporting evidence (co-segregation with disease in multiple affected members, PP1). Taken together, these three lines of evidence allow to classify *ADAMTS2*:c.698dup as pathogenic.

The autosomal recessive disorder analyzed herein phenotypically resembles an EDS form that Hansen et al. (2015) already described for a case in Burmese cats (Hansen et al. 2015). No molecular genetic analysis was reported in that case. In contrast, different previously identified variants in the *COL5A1* gene were involved in autosomal dominant classical EDS cases in cats (Spycher et al. 2018; Kiener et al. 2022a). Similar to EDS in humans, there are different types of this syndrome in animals that show locus heterogeneity and different modes of inheritance (Malfait et al. 2017).

Our analysis suggests that inbreeding within a population of free-roaming farm cats has provoked the outbreak of a lethal recessive disease. The genome of the sequenced case did not show a particularly high level of homozygous variant calls. Nonetheless, the results of our study are in agreement with a more representative study reporting 19% of UK non-pedigree cats with a higher than expected content of homozygous genome regions due to recent inbreeding events (Irving McGrath et al. 2021). Potential health risks due to inbreeding should be kept in mind when managing free-roaming cat populations.

Conclusion

In summary, we describe the *ADAMTS2*:c.698dup frameshift variant as a highly plausible candidate causative variant for dermatosparaxis EDS, an autosomal recessive form of EDS in cats. Similar *ADAMTS2* variants have been reported in humans, cattle, sheep and dogs with dermatosparaxis EDS. The functional knowledge from other species and the perfect co-segregation of the genotypes with the phenotype in a medium sized cat family support the causality of the detected *ADAMTS2*:c.698dup variant. Our findings enable genetic testing that can be used to detect healthy carriers and to eradicate this potentially lethal disease from the cat population.

Data Availability Statement:

The whole genome sequence data from this study is publicly available from ENA (European Nucleotide Archive). The accessions are listed in Table S1. Supplemental Material provided at figshare: https://doi.org/10.25387/g3.22809347.

Acknowledgement:

The authors are grateful to the cat owner who submitted the animals and the pedigree information underlying this study. We thank the Next Generation Sequencing Platform of the University of Bern for performing the high-throughput experiment and the Interfaculty Bioinformatics Unit of the University of Bern for providing high-performance computing infrastructure.

Conflict of interest:

The authors declare no conflict of interest.

Funder Information:
This project was funded by the Swiss National Science Foundation, grant number 310030_200354.

References:

Bauer A, Bateman JF, Lamandé SR, Hanssen E, Kirejczyk SGM, Yee M, Ramiche A, Jagannathan V, Welle M, Leeb T, et al. 2019. Identification of Two Independent COL5A1 Variants in Dogs with Ehlers-Danlos Syndrome. Genes. 10(10):731. doi:10.3390/genes10100731.

Benitah N, Matousek JL, Barnes RF, Lichtensteiger CA, Campbell KL. 2004. Diaphragmatic and perineal hernias associated with cutaneous asthenia in a cat. J Am Vet Med Assoc. 224(5):706-9, 698. doi:10.2460/javma.2004.224.706.

Butler WF. 1975. Fragility of the skin in a cat. Res Vet Sci. 19(2):213–216. PMID: 1166128.

Carty CI, Lee AM, Wienandt NAE, Stevens EL, Alves DA, Browne JA, Bryan J, Ryan EG, Cassidy JP. 2016. Dermatosparaxis in two Limousin calves. Ir Vet J. 69(15). doi:10.1186/s13620-016-0074-5.

Cingolani P, Platts A, Le Wang L, Coon M, Nguyen T, Wang L, Land SJ, Lu X, Ruden DM. 2012. A program for annotating and predicting the effects of single nucleotide polymorphisms, SnpEff: SNPs in the genome of Drosophila melanogaster strain w1118; iso-2; iso-3. Fly. 6(2):80–92. doi:10.4161/fly.19695.

Colige A, Nuytinck L, Hausser I, van Essen AJ, Thiry M, Herens C, Adès LC, Malfait F, Paepe A de, Franck P, et al. 2004. Novel types of mutation responsible for the dermatosparactic type of Ehlers-Danlos syndrome (Type VIIC) and common polymorphisms in the ADAMTS2 gene. J Invest Dermatol. 123(4):656–663. doi:10.1111/j.0022-202X.2004.23406.x.

Colige A, Sieron AL, Li SW, Schwarze U, Petty E, Wertelecki W, Wilcox W, Krakow D, Cohn DH, Reardon W, et al. 1999. Human Ehlers-Danlos syndrome type VII C and bovine dermatosparaxis are caused by mutations in the procollagen I N-proteinase gene. Am J Hum Genet. 65(2):308–317. doi:10.1086/302504.

Counts DF, Byers PH, Holbrook KA, Hegreberg GA. 1980. Dermatosparaxis in a Himalayan cat: I. Biochemical studies of dermal collagen. J Invest Dermatol. 74(2):96–99. doi:10.1111/1523-1747.ep12519991.

Crosaz O, Vilaplana-Grosso F, Alleaume C, Cordonnier N, Bedu-Leperlier A-S, Marignac G, Hubert B, Rosenberg D. 2013. Skin fragility syndrome in a cat with multicentric follicular lymphoma. J Feline Med Surg. 15(10):953–958. doi:10.1177/1098612X13483460.

Eßer M, Niederacher V, Pfeffer K, Scheuer H. 1999. Über die selten auftretende Dermatosparaxie (Ehlers-Danlos-Syndrom) bei einem Fohlen - ein Fallbericht. Pferdeheilkunde. 15:434–436.

Gross TL, Ihrke PJ, Walder EJ, Affolter VK. 2008. Skin diseases of the dog and cat: clinical and histopathologic diagnosis. 2nd ed. Hong Kong: John Wiley & Sons. ISBN: 9780632064526.

Hansen N, Foster SF, Burrows AK, Mackie J, Malik R. 2015. Cutaneous asthenia (Ehlers-Danlos-like syndrome) of Burmese cats. J Feline Med Surg. 17(11):954–963. doi:10.1177/1098612X15610683.

Hanset R, Lapiere CM. 1974. Inheritance of dermatosparaxis in the calf. A genetic defect of connective tissues. J Hered. 65(6):356–358. doi:10.1093/oxfordjournals.jhered.a108549.

Hargis AM, Myers S. 2017. The Integument. In: Zachary JF, editor. Pathologic Basis of Veterinary Disease. 6th ed. St Loius: Elsevier. 1009-1146.e1. doi: 10.1016/B978-0-323-35775-3.00017-5.

Hegreberg GA. 1975. Animal model of human disease: Ehlers-Danlos syndrome. Am J Pathol. 79(2):383–386.

Holbrook KA, Byers PH, Counts DF, Hegreberg GA. 1980. Dermatosparaxis in a Himalayan cat: II. Ultrastructural studies of dermal collagen. J Invest Dermatol. 74(2):100–104. doi:10.1111/1523-1747.ep12520000.

Irving McGrath J, Zhang W, Hollar R, Collings A, Powell R, Foale RD, Thurley N, Brockman JA, Mellanby RJ, Gunn-Moore DA, et al. 2021. More Than a Moggy; A Population Genetics Analysis of the United Kingdom's Non-Pedigree Cats. Genes. 12(10): 1619. doi:10.3390/genes12101619.

Jacinto JGP, Häfliger IM, Veiga IMB, Letko A, Benazzi C, Bolcato M, Drögemüller C. 2020. A Heterozygous Missense Variant in the COL5A2 in Holstein Cattle Resembling the Classical Ehlers-Danlos Syndrome. Animals. 10(11): 2002. doi:10.3390/ani10112002.

Jaffey JA, Bullock G, Guo J, Mhlanga-Mutangadura T, O'Brien DP, Coates JR, Morrissey R, Hutchison R, Donnelly KS, Cohn LA, et al. 2022. Novel Homozygous ADAMTS2 Variants and Associated Disease Phenotypes in Dogs with Dermatosparactic Ehlers-Danlos Syndrome. Genes. 13(11):2158. doi:10.3390/genes13112158.

Jaffey JA, Bullock G, Teplin E, Guo J, Villani NA, Mhlanga-Mutangadura T, Schnabel RD, Cohn LA, Johnson GS. 2019. A homozygous ADAMTS2 nonsense mutation in a Doberman Pinscher dog with Ehlers Danlos syndrome and extreme skin fragility. Anim Genet. 50(5):543–545. doi:10.1111/age.12825.

Jagannathan V, Drögemüller C, Leeb T. 2019. A comprehensive biomedical variant catalogue based on whole genome sequences of 582 dogs and eight wolves. Anim Genet. 50(6):695–704. doi:10.1111/age.12834.

Joller S, Berenguer Veiga I, Drögemüller C. 2017. Dermatosparaxis in White Dorper sheep: confirmation of a causative nonsense mutation in ADAMTS2. Anim Genet. 48(6):729–730. doi:10.1111/age.12591.

Kiener S, Apostolopoulos N, Schissler J, Hass P-K, Leuthard F, Jagannathan V, Schuppisser C, Soto S, Welle M, Mayer U, et al. 2022. Independent COL5A1 Variants in Cats with Ehlers-Danlos Syndrome. Genes. 13(5):797. doi:10.3390/genes13050797.

Kiener S, Chevallier L, Jagannathan V, Briand A, Cochet-Faivre N, Reyes-Gomez E, Leeb T. 2022. A COL5A2 In-Frame Deletion in a Chihuahua with Ehlers-Danlos Syndrome. Genes. 13(5):934. doi:10.3390/genes13050934.

Lapière CM, Lenaers A, Kohn LD. 1971. Procollagen peptidase: an enzyme excising the coordination peptides of procollagen. Proc Natl Acad Sci U S A. 68(12):3054–3058. doi:10.1073/pnas.68.12.3054.

Lapière CM, Nusgens BV. 1993. Ehlers-Danlos type VII-C, or human dermatosparaxis. The offspring of a union between basic and clinical research. Arch Dermatol. 129(10):1316–1319. doi:10.1001/archderm.1993.01680310086015.

Le Goff C, Somerville RPT, Kesteloot F, Powell K, Birk DE, Colige AC, Apte SS. 2006. Regulation of procollagen amino-propeptide processing during mouse embryogenesis by specialization of homologous ADAMTS proteases: insights on collagen biosynthesis and dermatosparaxis. Development. 133(8):1587–1596. doi:10.1242/dev.02308.

Malfait F, Castori M, Francomano CA, Giunta C, Kosho T, Byers PH. 2020. The Ehlers-Danlos syndromes. Nat Rev Dis Primers. 6(1):64. doi:10.1038/s41572-020-0194-9.

Malfait F, Francomano C, Byers P, Belmont J, Berglund B, Black J, Bloom L, Bowen JM, Brady AF, Burrows NP, et al. 2017. The 2017 international classification of the Ehlers-Danlos syndromes. Am J Med Genet C Semin Med Genet. 175(1):8–26. doi:10.1002/ajmg.c.31552.

Mauldin EA, Peters-Kennedy J. 2015. Integumentary System. In: Maxie MG, editor. Jubb, Kennedy & Palmer's Pathology of Domestic Animals: Volume 1. 6th ed. London: Elsevier. 509-736.e1. doi: 10.1016/B978-0-7020-5317-7.00006-0.

McKenna A, Hanna M, Banks E, Sivachenko A, Cibulskis K, Kernytsky A, Garimella K, Altshuler D, Gabriel S, Daly M, et al. 2010. The Genome Analysis Toolkit: a MapReduce framework for analyzing next-generation DNA sequencing data. Genome Res. 20(9):1297–1303. doi:10.1101/gr.107524.110.

Monteagudo LV, Ferrer LM, Catalan-Insa E, Savva D, McGuffin LJ, Tejedor MT. 2015. In silico identification and three-dimensional modelling of the missense mutation in ADAMTS2 in a sheep flock with dermatosparaxis. Vet Dermatol. 26(1):49-52, e15-6. doi:10.1111/vde.12178.

Parapia LA, Jackson C. 2008. Ehlers-Danlos syndrome--a historical review. Br J Haematol. 141(1):32–35. doi:10.1111/j.1365-2141.2008.06994.x.

Rashmir-Raven A. 2013. Heritable equine regional dermal asthenia. Vet Clin North Am Equine Pract. 29(3):689–702. doi:10.1016/j.cveq.2013.09.001.

Richards S, Aziz N, Bale S, Bick D, Das S, Gastier-Foster J, Grody WW, Hegde M, Lyon E, Spector E, et al. 2015. Standards and guidelines for the interpretation of sequence variants: a joint consensus recommendation of the American College of Medical Genetics and Genomics and the Association for Molecular Pathology. Genet Med. 17(5):405–424. doi:10.1038/gim.2015.30.

Robinson JT, Thorvaldsdóttir H, Winckler W, Guttman M, Lander ES, Getz G, Mesirov JP. 2011. Integrative genomics viewer. Nat Biotechnol. 29(1):24–26. doi:10.1038/nbt.1754.

Sequeira JL, Rocha NS, Bandarra EP, Figueiredo LM, Eugenio FR. 1999. Collagen dysplasia (cutaneous asthenia) in a cat. Vet Pathol. 36(6):603–606. doi:10.1354/vp.36-6-603.

Spycher M, Bauer A, Jagannathan V, Frizzi M, Lucia M de, Leeb T. 2018. A frameshift variant in the COL5A1 gene in a cat with Ehlers-Danlos syndrome. Anim Genet. 49(6):641–644. doi:10.1111/age.12727.

Untergasser A, Cutcutache I, Koressaar T, Ye J, Faircloth BC, Remm M, Rozen SG. 2012. Primer3--new capabilities and interfaces. Nucleic Acids Res. 40(15):e115. doi:10.1093/nar/gks596.

Uzal FA, Plattner BL, Hostetter JM. 2016. Alimentary System. In: Maxie MG, editor. Jubb, Kennedy & Palmer's Pathology of Domestic Animals: Volume 2. 6th ed. London: Elsevier. 1-257.e2. doi: 10.1016/B978-0-7020-5318-4.00007-3 .

van Damme T, Colige A, Syx D, Giunta C, Lindert U, Rohrbach M, Aryani O, Alanay Y, Simsek-Kiper PÖ, Kroes HY, et al. 2016. Expanding the clinical and mutational spectrum of the Ehlers-Danlos syndrome, dermatosparaxis type. Genet Med. 18(9):882–891. doi:10.1038/gim.2015.188.

Vroman R, Malfait A-M, Miller RE, Malfait F, Syx D. 2021. Animal Models of Ehlers-Danlos Syndromes: Phenotype, Pathogenesis, and Translational Potential. Front Genet. 12:726474. doi:10.3389/fgene.2021.726474.

Wang W-M, Lee S, Steiglitz BM, Scott IC, Lebares CC, Allen ML, Brenner MC, Takahara K, Greenspan DS. 2003. Transforming growth factor-beta induces secretion of activated ADAMTS-2. A procollagen III N-proteinase. J Biol Chem. 278(21):19549–19557. doi:10.1074/jbc.M300767200.

Weingart C, Haußer I, Kershaw O, Kohn B. 2014. Ehlers-Danlos-like-Syndrom bei einer Katze [Ehlers-Danlos like syndrome in a cat]. Schweiz Arch Tierheilkd. 156(11):543–548. doi:10.1024/0036-7281/a000645.

Zhou H, Hickford JGH, Fang Q. 2012. A premature stop codon in the ADAMTS2 gene is likely to be responsible for dermatosparaxis in Dorper sheep. Anim Genet. 43(4):471–473. doi:10.1111/j.1365-2052.2011.02275.x.

Table 1. Results of variant filtering in the affected cat against 77 control genomes.

Filtering step	Heterozygous	Homozygous
All variants in the sequenced cat	6,011,674	5,983,799
Private variants	70,995	20,434
Protein-changing private variants	353	81
Protein-changing private variants in functional candidate genes	1	1

Figures

Fig. 1. Gross condition of the deceased affected kittens (A-B initial case; C-D from second and third litter). A) Almost the entire head and the left neck showed extensive alopecia and severe multifocal ulcerative and purulent dermatitis occasionally accompanied by barky, dark-brown crust formation (arrow). The oral mucosa was moderately anemic. B) A rectal prolapse was also present in the initial case (arrow). C) After surgical treatment: severe loss of the epidermis especially in the cranial body regions (head, neck, forelimbs) with severe ulcerative partly crustose dermatitis and fragile skin, that tore at light touch (arrow); D) Kitten with a milder course, gross lesions were found exclusively on the head (temples and mucocutaneous junctions) with mild to moderate ulceration and crusting (arrow).

Fig. 2. Abdominal cavity (lower and middle part of the figure) with a diaphragmatic hernia (arrows). The stomach and large parts of the omentum majus passed through this defect into the thoracic cavity, which is located behind the diaphragm in the upper part of the figure.

Fig. 3. Skin of the head of an affected kitten. A) haemotoxylin & eosin stain: Severe chronic pyogranulomatous (arrowhead) and severe acute ulcerative and suppurative dermatitis (black arrows) accompanied by serocellular crusts which contained bacteria (asterisk). Cleft-formation (white arrows) was observed at the dermo-epithelial junction adjacent to the ulcerative lesions. B) Periodic acid-Schiff reaction: Cleft-formation at the dermo-epithelial junction. The basement membrane zone (arrows) formed the floor of the cleft. C) Masson Trichrome stain: Collagen fibers were stained uniformely blue and loosely arranged (asterisks) in the area of the clefts.

Fig. 4. Longitudinal and cross section of collagen fibers (affected kitten): thin ribbon-like electron-dense fibrils appear disordered with an electron-lucent central area (hollow appearance).

Fig. 5. The EDS-associated *ADAMTS2* variant on chromosome A1. A) Integrative Genome Viewer screenshot of the affected cat's sequence data indicates a one base pair insertion within a polyC stretch. In the IGV alignment the insertion/duplication is at the left end of this C-stretch. However, according to the 3'-rule of HGVS, the variant is annotated as ChrA1:90,995,621dup. Coordinates refer to the F.catus_Fca126_mat1.0 assembly. Lower case letters indicate intronic, uppercase letters indicate exonic bases. B) Sanger electropherograms of an unaffected (top), a heterozygous (middle) and an affected cat homozygous for the mutant allele (bottom). Please note that Sanger sequencing was conducted using a reverse primer. Therefore, overlapping electropherogram peaks appear to the left of the heterozygous insertion/duplication. C) Phenotype of a healthy kitten (left) and an EDS-affected sibling showing typical skin lesions and growth retardation (right).

Fig. 6. Pedigree of cat family comprising three litters with affected kittens, all sired by the same father. Litters 1-3 are consistently numbered in Table S3 and S4. Males are shown as squares and females as circles. Open symbols indicate unaffected cats, which may be heterozygous carriers of the *ADAMTS2*:c.698dup variant as stated in the individuals' genotypes. All affected individuals, homozygous for the *ADAMTS2* frameshift duplication, are deceased and indicated by filled strikethrough symbols.

Figure 1
160x115 mm (x DPI)

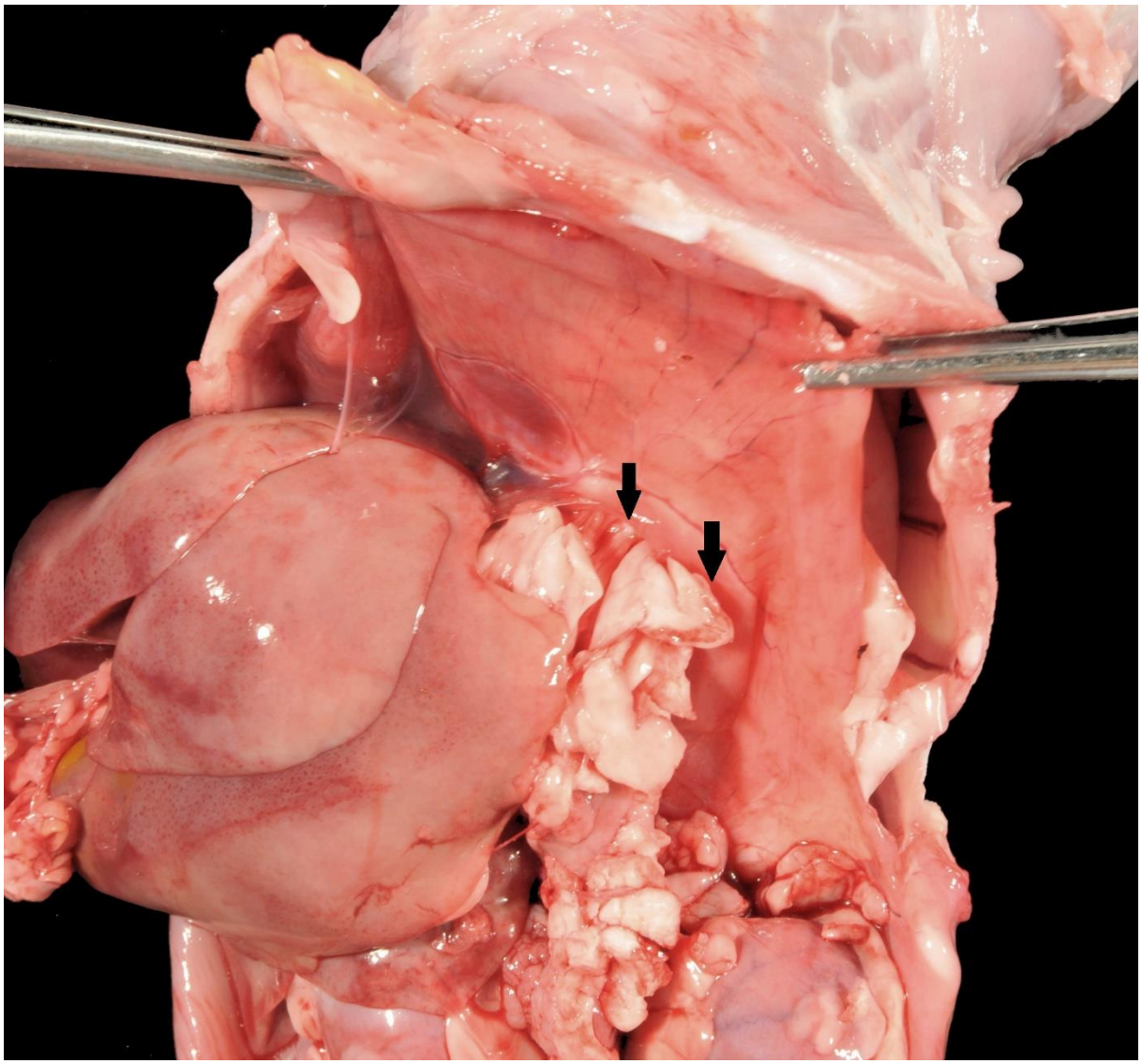

Figure 2
160x149 mm (x DPI)

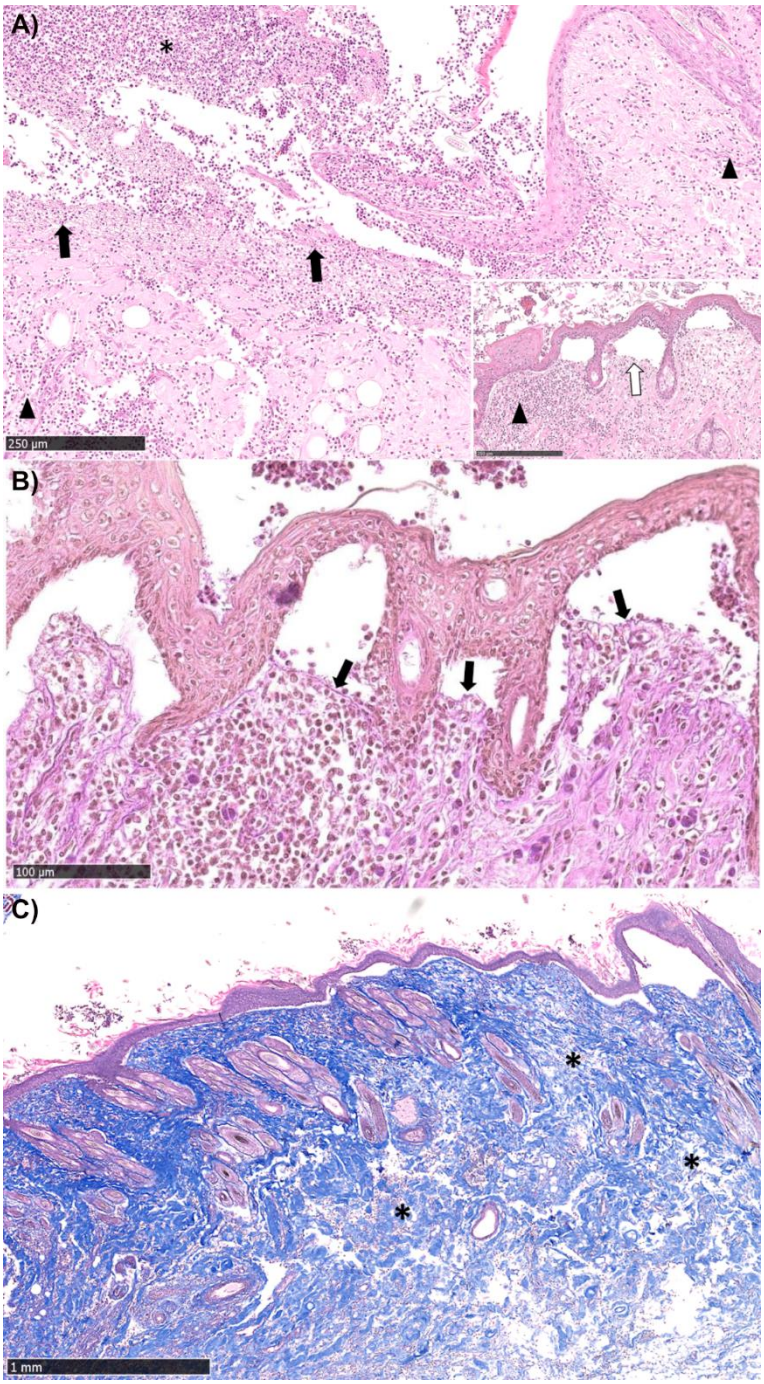

Figure 3
100x182 mm (x DPI)

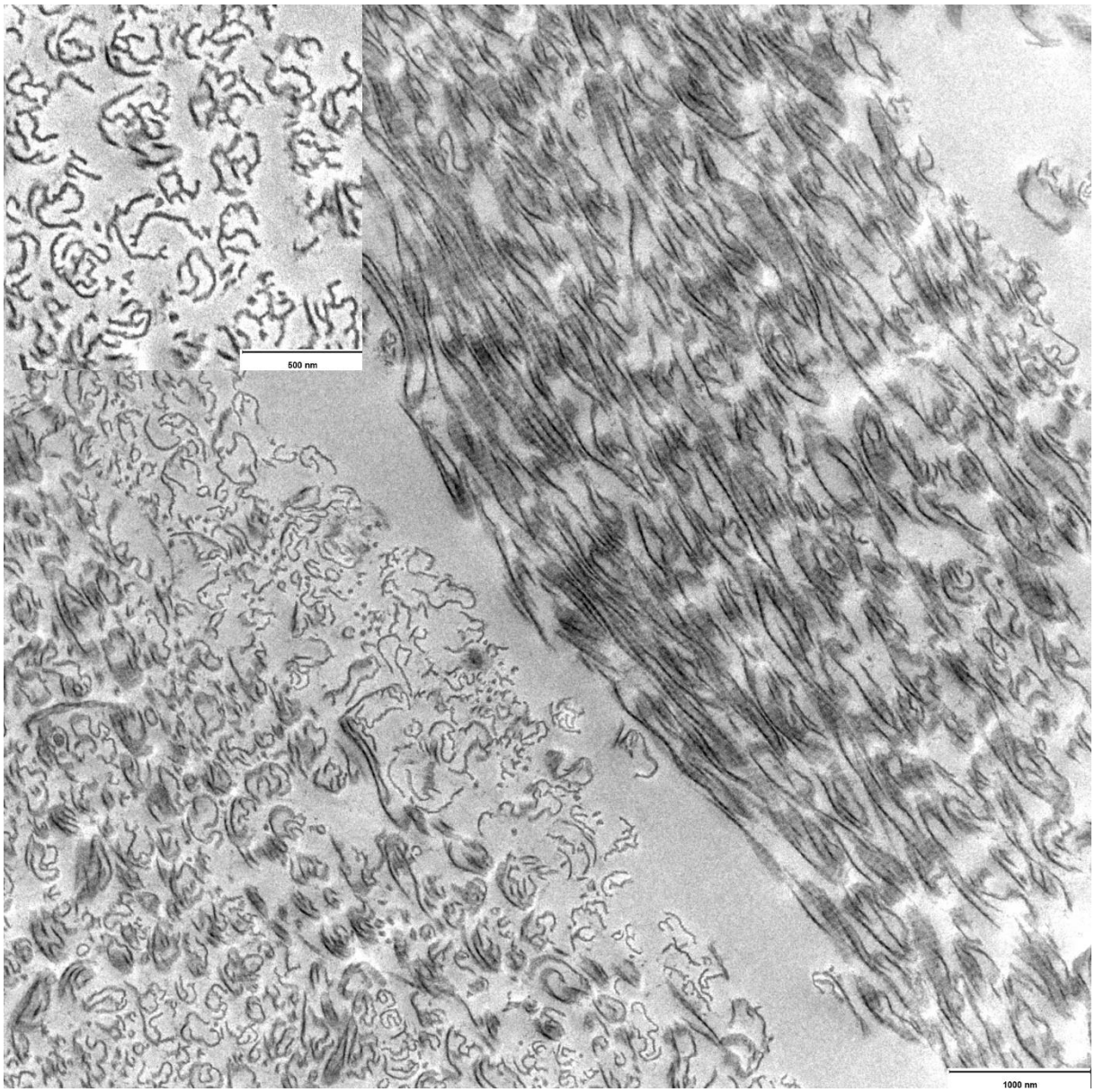

Figure 4
160x160 mm (x DPI)

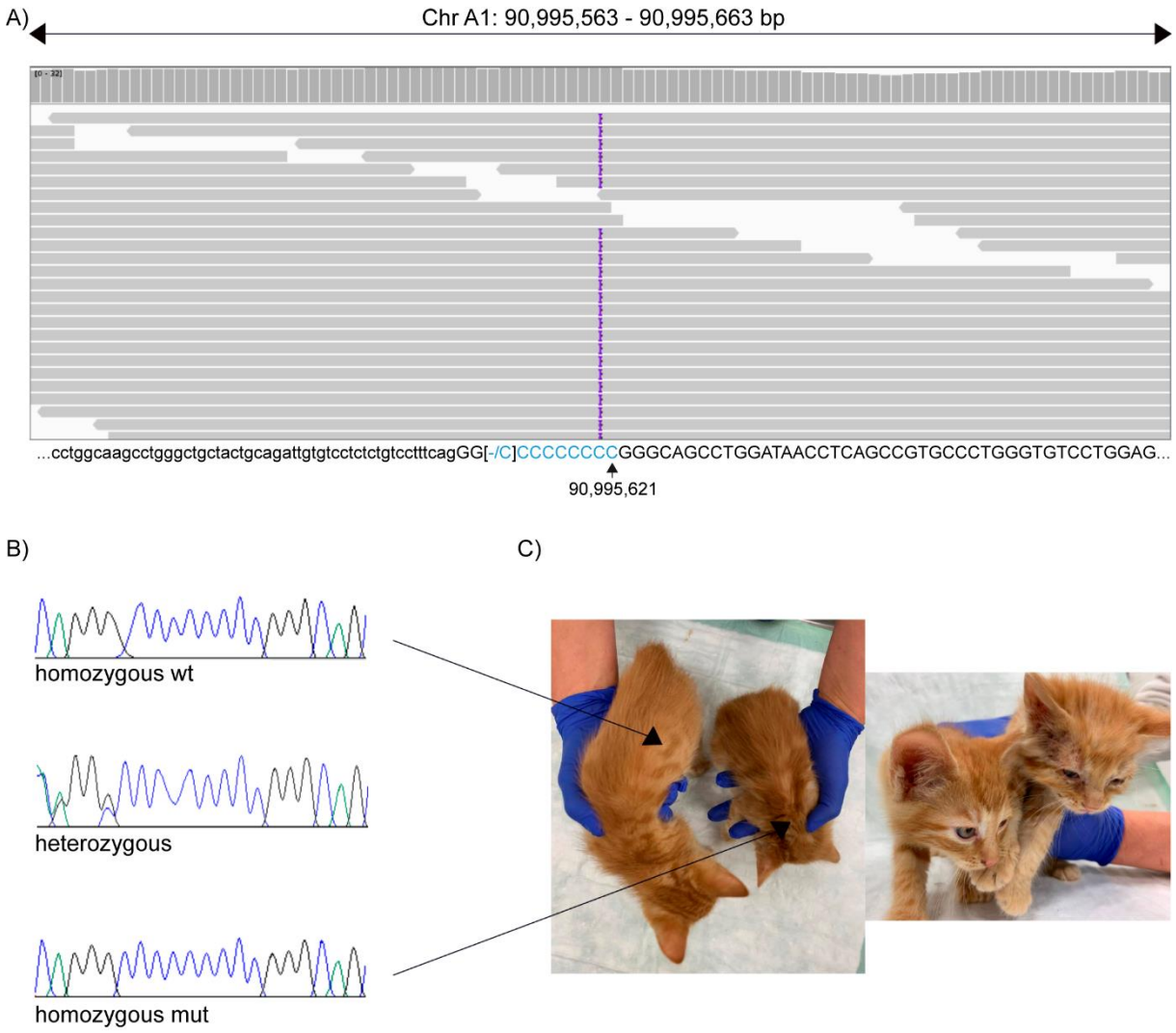

Figure 5
160x141 mm (x DPI)

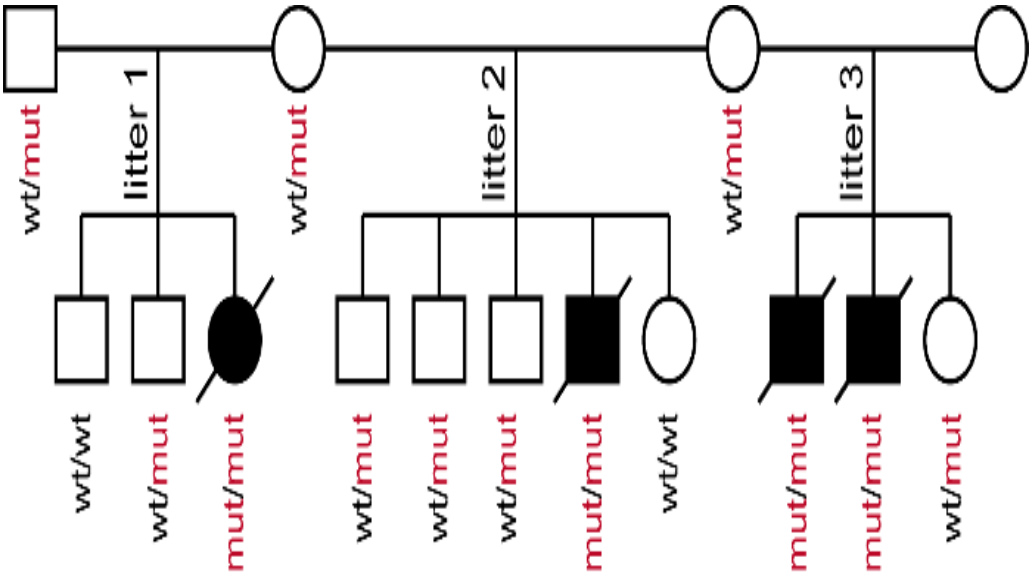

Figure 6
80x27 mm (x DPI)