Signal Transduction:

The BCL-2 family member bok binds to the coupling domain of inositol 1,4,5-trisphosphate receptors and protects them from proteolytic cleavage

Jacqualyn J. Schulman, Forrest A. Wright, Thomas Kaufmann and Richard J. H. Wojcikiewicz

J. Biol. Chem. published online July 24, 2013

Access the most updated version of this article at doi: 10.1074/jbc.M113.496570

Find articles, minireviews, Reflections and Classics on similar topics on the JBC Affinity Sites.

Alerts:
- When this article is cited
- When a correction for this article is posted

Click here to choose from all of JBC's e-mail alerts

This article cites 0 references, 0 of which can be accessed free at
http://www.jbc.org/content/early/2013/07/24/jbc.M113.496570.full.html#ref-list-1

source: https://doi.org/10.7892/boris.39537 | downloaded: 12.10.2024

JBC Papers in Press. Published on July 24, 2013 as Manuscript M113.496570
The latest version is at http://www.jbc.org/cgi/doi/10.1074/jbc.M113.496570

THE BCL-2 FAMILY MEMBER BOK BINDS TO THE COUPLING DOMAIN OF INOSITOL 1,4,5-TRISPHOSPHATE RECEPTORS AND PROTECTS THEM FROM PROTEOLYTIC CLEAVAGE

Jacqualyn J. Schulman, Forrest A. Wright, Thomas Kaufmann[2] and Richard J. H. Wojcikiewicz[1]

From Department of Pharmacology, SUNY Upstate Medical University, Syracuse, NY 13210, USA
Running title: Bok binds to IP_3 receptors
[1]To whom correspondence should be addressed: Department of Pharmacology, SUNY Upstate Medical University, 750 E. Adams St., Syracuse, NY 13210, USA. Phone: 315-464-7956; Fax: 315-464-8014; E-mail: wojcikir@upstate.edu
[2]University of Bern, Medical Faculty, Institute of Pharmacology, Friedbuehlstrasse 49, CH-3010 Bern, Switzerland

Background: Bok is a Bcl-2 protein family member, with largely unknown properties.
Results: Bok binds constitutively to IP_3 receptors and protects them from proteolysis, but does not appear to alter their Ca^{2+} channel activity.
Conclusion: Bok is novel component of IP_3 receptor complexes.
Significance: A new locus for studies on IP_3 receptor and apoptosis regulation has been defined.

SUMMARY

Bok is a member of the Bcl-2 protein family that controls intrinsic apoptosis. Bok is most closely related to the pro-apoptotic proteins Bak and Bax, but in contrast to Bak and Bax, very little is known about its cellular role. Here we report that Bok binds strongly and constitutively to inositol 1,4,5-trisphosphate receptors (IP_3Rs), proteins that form tetrameric calcium channels in the endoplasmic reticulum (ER) membrane and govern the release of ER calcium stores. Bok binds most strongly to IP_3R1 and IP_3R2, and barely to IP_3R3, and essentially all cellular Bok is IP_3R bound in cells that express substantial amounts of IP_3Rs. Binding to IP_3Rs appears to be mediated by the putative BH4 domain of Bok and the docking site localizes to a small region within the coupling domain of IP_3Rs (amino acids 1895-1903 of IP_3R1) that is adjacent to numerous regulatory sites, including sites for proteolysis. With regard to the possible role of Bok-IP_3R binding, the following was observed: (i) Bok does not appear to control the ability of IP_3Rs to release ER calcium stores, (ii) Bok regulates IP_3R expression, (iii) persistent activation of inositol 1,4,5-trisphosphate-dependent cell signaling causes Bok degradation by the ubiquitin-proteasome pathway, in a manner that parallels IP_3R degradation, and (iv) Bok protects IP_3Rs from proteolysis, either by chymotrypsin *in vitro* or by caspase-3 *in vivo* during apoptosis. Overall, these data show that Bok binds strongly and constitutively to IP_3Rs and that the most significant consequence of this binding appears to be protection of IP_3Rs from proteolysis. Thus, Bok may govern IP_3R cleavage and activity during apoptosis.

The Bcl-2 protein family governs the intrinsic (mitochondrial) apoptotic pathway, and contains members that are anti-apoptotic (e.g. Bcl-2 and Mcl-1), and also members that are pro-apoptotic (e.g. Bax and Bak); complex interactions between these proteins control apoptosis and cell viability [1,2]. These proteins contain conserved Bcl-2 homology (BH) domains, and it has been generally thought that pro-apoptotic proteins like Bax and Bak contain three BH domains (BH1, BH2 and BH3), whereas anti-apoptotic proteins like Bcl-2 and Mcl-1 contain four (BH1, BH2, BH3 and BH4), with the BH4 domain conferring anti-apoptotic activity [1,2]. An additional group of pro-apoptotic BH3-only proteins (e.g. Bim and Bad) completes the family [1,2]. This canonical view is not settled, however, as it appears that pro-apoptotic proteins like Bax and Bak may also contain a BH4 domain [2,3].

Bax and Bak are closely related proteins that, when active, induce permeabilization of the outer mitochondrial membrane, cytochrome c release, caspase activation and, ultimately, apoptosis [1-3]. Interestingly, while knockout of either Bax or Bak has little effect on mouse

Copyright 2013 by The American Society for Biochemistry and Molecular Biology, Inc.

physiology (although $Bax^{-/-}$ males are sterile), Bax/Bak knockout mice exhibit various severe defects, indicating redundancy of function for Bax and Bak [1]. Bok, which was originally identified as an Mcl-1-binding protein, is similar in sequence to Bax and Bak and has the same arrangement of domains [4-6], but has been investigated much less thoroughly [1-3]. Bok is expressed in many, and perhaps all, mammalian cell types [7,8] and, like Bax and Bak [3,5,6], its over-expression in cultured cells causes apoptosis [4-9]. Mice lacking Bok are phenotypically normal and hematopoietic cells derived from these mice respond normally to apoptotic stimuli [7], again indicative of redundancy among the Bok/Bax/Bak group. However, it is important to note that the existence of severe defects in Bax/Bak knockout mice show that Bok cannot compensate for the absence of Bak and Bax [1], and suggest that it has unique properties. Indeed, the pro-apoptotic effect of Bok is not seen in cells lacking Bak and Bax, indicating that it acts in concert with or upstream of Bak and Bax [8]. Further, the atypical transmembrane domain of Bok appears to direct it towards the endoplasmic reticulum (ER) and Golgi, rather than to the mitochondrial outer membrane, which is the more typical location for many other Bcl-2 family members [8]. How this distribution contributes to the cellular role of Bok remains unclear, however [8]. Finally, the Bok gene region is frequently deleted in cancer, suggesting that it might be a tumor suppressor [10].

An extensive, but confusing, literature exists regarding the regulation of inositol 1,4,5-trisphosphate (IP_3) receptors (IP_3Rs) by Bcl-2 family proteins [11,12]. IP_3Rs are ~300kDa proteins that form tetrameric, IP_3- and Ca^{2+}-gated Ca^{2+} channels in ER membranes of mammalian cells and play a key role in cell signaling [13,14]. There are three highly homologous IP_3R types in mammals, IP_3R1, IP_3R2 and IP_3R3, and although their tissue distribution varies, they have similar properties, are often co-expressed, and form heteromers [13-15]. IP_3, in concert with Ca^{2+} binding, induces yet to be defined conformational changes in the tetrameric channel that allow Ca^{2+} to flow from stores within the ER lumen into the cytosol to increase cytosolic Ca^{2+} concentration [13,14]. IP_3Rs also play a role in controlling mitochondrial Ca^{2+} uptake and metabolism, and intrinsic apoptosis, and myriad effects of Bcl-2 family members on IP_3R activity and ER Ca^{2+} content have been described [11,12,16]. Perhaps most significantly, it has been reported that Bcl-2 promotes prosurvival Ca^{2+} signals, while inhibiting proapoptotic Ca^{2+} signals [17-20,11,12], and similar effects have been reported for Bcl-xL and Mcl-1 [19,21,11,12]; it remains controversial, however, whether this is due to a direct effect of Bcl-2 etc on the Ca^{2+} releasing properties of IP_3Rs, or because they also reduce ER Ca^{2+} content [11,12,16]. Conversely, it has been reported that Bax and Bak increase ER Ca^{2+} content [22,23], and it has been proposed that this reflects the fact that Bcl-2 family members regulate IP_3R phosphorylation and thus Ca^{2+} leak from the ER [11,16,22]. Physical interactions between anti-apoptotic Bcl-2 family proteins and IP_3Rs have been described [18-21], and, at least for Bcl-2, this is mediated by the BH4 domain [20,24-26]. In contrast, to date, there is no clear evidence for direct binding of pro-apoptotic proteins to IP_3Rs [22,23,11].

Here we report that Bok interacts robustly with IP_3Rs, that this interaction is by far the strongest among the Bcl-2 family, that the binding site is in the coupling domain of IP_3Rs adjacent to other regulatory sites, and that the most significant consequence of this binding appears to be protection of IP_3Rs from proteolysis.

EXPERIMENTAL PROCEDURES

Materials — αT3 cells, HeLa cells, and HEK 293T cells were cultured as described [15,27,28]. SV40 large T antigen-immortalized wild-type (C57BL/6) and $Bok^{-/-}$ (C57BL/6) mouse embryonic fibroblasts (MEFs) [8] were cultured in DMEM plus 5% fetal bovine serum and antibiotics (100 units penicillin and 100μg streptomycin/ml). Antibodies raised in rabbits were: anti-IP_3R1, raised against amino acids 2731-2749 of IP_3R1 [15]; anti-$IP_3R1^{326-341}$, a kind gift from Dr Suresh Joseph, Thomas Jefferson University, Philadelphia, PA; anti-$IP_3R1^{1829-1848}$ (Affinity Bioreagents, Inc.); anti-IP_3R2 and anti-IP_3R3 [15]; anti-erlin2 [28]; anti-HA epitope [30]: anti-Mcl-1 D35A5, anti-Bcl-xL 54H6, anti-caspase-3 9662 and anti-Bcl-2 50E3 (Cell Signaling Technology); anti-Bak 06-536 (Millipore); anti-Bax N-20 (Santa Cruz Biotechnology Inc.); and anti-Bok, raised against amino acids 19-32 of mouse Bok [7,8]. Mouse monoclonal antibodies were: anti-IP_3R3, raised

against amino acids 22-230 of human IP_3R3 (BD Transduction Labs.); anti-ubiquitin clone FK2 (BioMol International); anti-HA epitope clone HA11 (Covance), and anti-FLAG epitope clone M2 (Sigma). Rat monoclonal anti-$IP_3R1^{679-727}$ clone 4C11 was a kind gift from Dr Katsuhiko Mikoshiba, RIKEN, Japan. Horse radish peroxidase-conjugated secondary antibodies, raised in goat, were obtained from Sigma. Gonadotropin-releasing hormone (GnRH), oleoyl-L-α-lysophosphatidic acid (LPA), *N*-ethylmaleimide, ATP, IP_3, protease inhibitors, Triton X-100, CHAPS, chymotrypsin type I-S and digitonin were purchased from Sigma. DTT, Precision Plus™ Protein Standards, and SDS-PAGE reagents were from Bio-Rad. Protein A-Sepharose CL-4B was from Amersham Biosciences. MG132 was from Biomol. Staurosporine was from Enzo Life Sciences.

Cell lysis, immunoprecipitation, SDS-PAGE, and mass spectrometry — To prepare cell lysates for SDS-PAGE or for immunoprecipitation, cells were harvested with ice-cold lysis buffer (150 mM NaCl, 50 mM Tris-HCl, 1 mM EDTA, 1% CHAPS or 1% Triton X-100, 10 µM pepstatin, 0.2 mM phenylmethylsulfonyl fluoride, and 0.2 µM soybean trypsin inhibitor, pH 8.0) usually supplemented with 1 mM DTT. When IP_3 receptor polyubiquitination was assessed in MEFs, cells were harvested with DTT-free lysis buffer, then 5 mM *N*-ethylmaleimide was added to the lysates for 30 min, followed by 5 mM DTT. Lysates were incubated on ice for 30 min and clarified by centrifugation at 16,000 x *g* for 10 min at 4°C. To immunoprecipitate specific proteins, clarified lysates were incubated with antisera and Protein A-Sepharose CL-4B for 4-16 h at 4°C, and immunoprecipitates were washed thoroughly with lysis buffer, resuspended in gel-loading buffer [29], incubated at 37ºC for 30 min, subjected to SDS-PAGE, and either transferred to nitrocellulose for immunoblotting, or silver stained as described [30]. Immunoreactivity was detected and mass spectrometry was performed as described [30].

Analysis of exogenous Bok and IP_3Rs - A vector encoding mouse Bok tagged at the N-terminus with a triple FLAG epitope (3F-Bok) was created by inserting the mouse Bok cDNA sequence [8] into the KpnI / BamHI sites of p3xFLAG-CMV-10 (Sigma). This provided the template for the creation by PCR (primers available upon request) of vectors encoding 3F-Bok with N-terminal deletions and point mutations (Figure 4A). Likewise, a vector encoding mouse IP_3R1 tagged at the C-terminus with an HA epitope [27] was the origin of N-terminal deletion mutants (Figure 4C). Vectors encoding IP_3R1-3 have been described [31]. The authenticity of all cDNAs was confirmed by DNA sequencing. HEK 293T cells seeded at 3-4 x 10^5 / 9.6cm^2 well, were transfected ~24h later with 1-2 µg cDNAs and 6-9µl Superfect (Qiagen), and ~24h later were harvested with ~ 0.4ml/well 1% CHAPS lysis buffer. Lysates were then incubated without or with anti-IP_3R1, anti-IP_3R2, anti-IP_3R3, anti-HA or anti-FLAG, and immunoprecipitates and input lysates were subjected to SDS-PAGE.

Ca^{2+} mobilization - Cytosolic Ca^{2+} concentration ($[Ca^{2+}]_c$) was measured essentially as described [29]. Cells were harvested with HBSE [29], centrifuged (500 x *g* for 5min), resuspended in DMEM, recentrifuged, and finally resuspended at 2mg protein / ml in DMEM plus 10% fetal bovine serum and 10µM Fura 2-AM. After 1h at 37°C, cells were centrifuged (500 x *g* for 1min), were washed once with KHB [29], were resuspended in KHB at 1mg protein / ml and $[Ca^{2+}]_c$ was measured at room temperature [29]. To prepare permeabilized cells, cells were harvested with HBSE, were centrifuged (1500 x *g* for 5min), were resuspended and incubated at 37°C for 10min in DMEM plus 10% fetal bovine serum, were recentrifuged, were resuspended in ice-cold cytosol buffer (120 mM KCl, 2 mM KH_2PO_4, 2 mM $MgCl_2$, 2 mM ATP, 20 mM HEPES, pH 7.3), were recentrifuged, and finally were incubated at ~6mg protein / ml in cytosol buffer with 100µg/ml digitonin for 10min at 4°C. The permeabilized cells were then centrifuged (2000 x *g* for 2min at 4°C), were resuspended in cytosol buffer, 1µM Fura-2 was added and $[Ca^{2+}]$ in the suspension was measured [29].

Data analysis — All experiments were repeated at least once (*n* = the number of independent experiments) and representative images of gels and traces are shown. Quantitated data are graphed as mean ±SEM.

RESULTS

Bok associates with IP_3 receptors - Several proteins that regulate IP_3Rs have been identified by co-immunoprecipitation; for example, 3 proteins

(erlin1, erlin2 and RNF170) that mediate the degradation of activated IP_3Rs by the ubiquitin-proteasome pathway (UPP) were discovered on the basis of their association with IP_3R1 immunoprecipitated from GnRH-stimulated αT3 mouse pituitary cells [28,30,32-34]. Additional analysis of anti-IP_3R1 immunoprecipitates from αT3 cells revealed the presence of a 23kDa co-immunoprecipitating protein that was shown by mass spectral analysis to be Bok (Fig 1A).

αT3 cells respond to GnRH with a robust increase in IP_3 formation [35] and IP_3R degradation by the UPP [27,28,32-35], mediated by the erlin1/2 complex and RNF170, which rapidly associate with activated IP_3R1 [30,32-34]. However, in contrast to erlin2, Bok co-immunoprecipitation with IP_3R1 was unaltered by acute exposure to GnRH, indicating that Bok is constitutively associated with IP_3R1, irrespective of the activation state of IP_3R1 (Fig 1B). Since, in principle, the presence of Bok in anti-IP_3R1 immunoprecipitates could be an artifact of unanticipated cross-reactivity of Bok with anti-IP_3R1 (the epitope for which is amino acids 2731-2749 of IP_3R1), we also examined whether other antibodies raised against different IP_3R1 epitopes could recover Bok. This was indeed the case, as antibodies raised against amino acids 326-341 and 1829-1848 of IP_3R1 also efficiently recovered Bok (data not shown). Furthermore, in MEFs, which express substantial amounts of both IP_3R1 and IP_3R3 (Figure 7), immunoprecipitation with either anti-IP_3R1 or anti-IP_3R3 recovered Bok (Fig 1C). Thus, Bok association with IP_3Rs is not dependent upon how IP_3Rs are immunoprecipitated and is seen in multiple cell types. Interestingly, and somewhat surprisingly given the extensive literature on the topic [11,12,16-21,24-26], other members of the Bcl-2 family did not detectably co-immunoprecipitate with IP_3R1 (Figure 1D); this was the case for all of the family members examined, whether anti-apoptotic (Mcl-1, Bcl-2 and Bcl-xL), or pro-apoptotic (Bak and Bax). Overall, these data indicate that among the Bcl-2 family, Bok exhibits by far the strongest interaction with IP_3Rs.

The majority of Bok is IP_3R-associated - In addition to demonstrating that Bok associates with IP_3R1, the data in Fig 1D also suggest that a large proportion of cellular Bok is IP_3R associated, since the relatively weak Bok signal seen in cell lysates is enhanced in IP_3R1 immunoprecipitates to an extent similar to that seen for IP_3R1. The extent to which Bok is IP_3R associated was more carefully assessed in αT3 cells, and also in HeLa cells and MEFs (Figure 2). In all cell types anti-IP_3R1 recovered Bok, and interestingly HeLa cell Bok migrated as a single band at 22kDa, rather than as the doublet at 23/21kDa seen in αT3 cells and MEFs (upper panels, lanes 2, 4 and 6). Importantly, anti-IP_3R1 depleted the vast majority of IP_3R1 immunoreactivity from αT3 and HeLa cell lysates and caused a similar decrease in Bok immunoreactivity (lower panels, lanes 1-4), indicating that in these cell types most, and perhaps all, Bok is IP_3R associated. A similar situation exists in MEFs, in which IP_3R immunoprecipitation was less efficient (for a reason that remains unclear), but in which IP_3R1 immunodepletion was again equivalent to that seen for Bok (lower panels, lanes 5 and 6).

Bok binds preferentially to IP_3R1 and IP_3R2 - To examine whether Bok binds equally well or differentially to IP_3R1, IP_3R2 and IP_3R3, HEK 293T cells were co-transfected to express 3F-Bok and each receptor type, followed by assessment of interactions by co-immunoprecipitation (Figure 3). Previous studies have shown that exogenous IP_3Rs are expressed at high levels in HEK 293T cells, such that the contribution of endogenous IP_3Rs to biochemical measurements (e.g. IP_3R phosphorylation) is negligible or undetectable [31]. Immunoprecipitation of IP_3R1 and IP_3R2 recovered a considerable amount of 3F-Bok (Figure 3A, lanes 2 and 4), while much less was recovered when IP_3R3 was immunoprecipitated (lane 6). Note that lane 6 also shows that Bok does not bind non-specifically to IgG (also shown in Figure 4D, lane 1). Importantly, conditions were arranged such that similar amounts of each receptor type were expressed and immunoprecipitated, as demonstrated by Coomassie staining of duplicate gels (Figure 3A, top panel). Further, the observed interaction between IP_3Rs and 3F-Bok represents a physiological phenomenon, rather than an event that occurs after cell lysis, since mixing lysates from cells expressing either IP_3R1 or 3F-Bok did not result in co-immunoprecipitation of 3F-Bok (Figure 3B, lane 2). The preferential binding of Bok to IP_3R1 and IP_3R2 was confirmed by immunoprecipitating 3F-Bok from the co-

transfected cells (Figure 3C); this led to the recovery of a substantial amount of IP_3R1 and IP_3R2 (lanes 2 and 6), but much less IP_3R3 (lane 10). Thus, Bok binds selectively to IP_3R1 and IP_3R2.

Determinants of Bok-IP_3R binding - To define the region of Bok that binds to IP_3Rs, Bok was initially truncated from the N-terminus to remove specific regions (Figure 4A) and binding to IP_3R1 was assessed by co-immunoprecipitation (Figure 4B). That 3F-Bok$^{\Delta 1\text{-}14}$ co-immunoprecipitates well, but 3F-Bok$^{\Delta 1\text{-}45}$ does not (Figure 4B, lanes 3 and 4), indicates that the region between amino acids 15-45 of Bok mediates binding to IP_3Rs, and suggests that the putative BH4 domain might be responsible. This notion was examined further with a mutant in which residues of the putative BH4 domain were replaced with alanine (Figure 4A); that 3F-Bok$^{A34\text{-}38}$ does not co-immunoprecipitate (Figure 4B, lane 6) provides additional evidence that the BH4 domain mediates binding to IP_3Rs, although the possibility remains that deletion/disruption of the BH4 domain perturbs another region of Bok that is the true mediator of binding.

Conversely, to define the IP_3R region that binds to Bok, IP_3R1 was truncated from the N-terminus to remove specific regions, guided by knowledge of the domain structure of IP_3Rs [13,14,32] (Figure 4C). That 3F-Bok co-immunoprecipitates with $IP_3R1HA^{\Delta 1\text{-}1581}$ as well as it does with IP_3R1HA^{WT} (Figure 4D, lanes 3 and 4), but not with $IP_3R1HA^{\Delta 1\text{-}2268}$ (lane 8), initially indicated that Bok binds between residues 1582-2268 (i.e. to the C-terminal part of the coupling domain). More subtle truncations were used to locate the exact binding site; 3F-Bok bound strongly to both $IP_3R1HA^{\Delta 1\text{-}1884}$ and $IP_3R1HA^{\Delta 1\text{-}1894}$ (lanes 5 and 6), but not to $IP_3R1HA^{\Delta 1\text{-}1903}$ (lane 7), indicating that Bok binds between residues 1895-1903 (amino acid sequence PSRKKAKEP). Interestingly, this highly charged sequence is completely conserved in IP_3R1 from other species (e.g. rat and human), but not in IP_3R2 and IP_3R3. However, a sequence with a very similar charge distribution is found in the corresponding region of IP_3R2 (PRMRVRDS), and is completely conserved in mouse, rat and human.

The significance of Bok binding to IP_3Rs

To examine the significance of the Bok-IP_3R interaction, we initially compared the properties of SV40 large T antigen-immortalized wild-type (WT) and Bok$^{-/-}$ MEFs. Analysis of lysates showed that the absence of Bok did not alter the levels of other Bcl-2 family proteins (Figure 5A), and analysis anti-IP_3R1 immunoprecipitates showed that the absence of Bok did not facilitate the binding of other Bcl-2 family proteins to IP_3R1 (Figure 5B). Interestingly, however, IP_3R levels were altered by the absence of Bok, with IP_3R1 levels increasing, and IP_3R2 and IP_3R3 levels decreasing (Figure 5A; also see Figure 7A).

Examination of $[Ca^{2+}]_c$ showed that LPA, which has previously been reported to stimulate IP_3 formation in fibroblasts [36], induced essentially identical responses in WT and Bok$^{-/-}$ MEFs (Figure 6A). In these experiments, EGTA was added just prior to LPA to chelate extracellular Ca^{2+} and block Ca^{2+} entry [37], such that changes in $[Ca^{2+}]_c$ are a measure of the release of intracellular Ca^{2+} stores. Thus, Bok does not appear to regulate IP_3R-mediated Ca^{2+} store release in intact cells under these conditions. To more directly assess IP_3R function, IP_3-induced Ca^{2+} mobilization was assessed in suspensions of permeabilized cells, in which exogenous IP_3 can gain access to IP_3Rs and release ER Ca^{2+} stores. Again, however, Ca^{2+} mobilization was the same in WT and Bok$^{-/-}$ MEFs (Figure 6B), indicating that the Ca^{2+} mobilizing function of IP_3Rs is not governed by Bok. Further, re-uptake of the Ca^{2+} released by IP_3 was identical in WT and Bok$^{-/-}$ MEFs, indicating that ER Ca^{2+} storage is also not regulated by Bok (Figure 6B).

Prolonged activation of IP_3Rs triggers their down-regulation by the UPP; they are first polyubiquitinated, and then transferred to the proteasome for degradation [32,33,38]. To examine whether these events are influenced by Bok, MEFs were exposed to LPA, and IP_3R levels were monitored. LPA caused a decline in IP_3R1-3 levels in WT MEFs in a manner that was partially blocked by the proteasome inhibitor MG132 (Figure 7A, lanes 1-6), indicating that IP_3Rs are down-regulated by the UPP under these conditions [27,32]. However, very similar down-regulation was seen in Bok$^{-/-}$ MEFs (lanes 7-12), indicating that Bok is not required for this process (this was true for IP_3R1 and IP_3R3, whereas IP_3R2 was undetectable). Consistent with this conclusion, IP_3R polyubiquitination, the other hallmark of IP_3R

processing by the UPP [27,32], was not inhibited by the absence of Bok (Figure 7B). In fact, IP_3R polyubiquitination was slightly greater in the $Bok^{-/-}$ MEFs, but this is most likely due to the increased expression of IP_3R1 and its presence in immunoprecipitates (compare lanes 4 vs. 2, and 8 vs. 6).

Interestingly, Bok expression was reduced in parallel to IP_3Rs expression in stimulated cells. This was apparent in LPA-stimulated WT MEFs and, again, was partially blocked by MG132 (Figure 7A, lanes 1-6), suggesting that it is via the UPP. Additional experiments with αT3 cells confirmed that Bok down-regulation occurs as IP_3R levels decline (Figure 7C, upper two panels), and also that as Bok levels decline, the amounts of other Bcl-2 family proteins and erlin2 are unaffected (lower panels). Analysis of the time-dependence of GnRH effects showed that IP_3R1 and Bok decline at similar rates, and, again, that MG132 partially blocks the declines (Figure 7D). Further, GnRH induced the formation of high molecular mass Bok immunoreactivity (e.g. at 26-27kDa) that was enhanced by MG132, suggesting that Bok might be ubiquitinated (Figure 7D, lane 2 and lanes 7-10). Further evidence that Bok is ubiquitinated in stimulated αT3 cells came from analysis of anti-IP_3R1 immunoprecipitates (Figure 7E). As expected, Bok co-immunoprecipitates strongly with IP_3R1 (lanes 4 and 5), and the high molecular mass anti-Bok immunoreactive bands seen in the presence of GnRH at 26-27kDa and above (lane 5), were also found to be anti-ubiquitin immunoreactive (lane 2). This selective ubiquitination and down-regulation of Bok and IP_3Rs, together with the finding that a large proportion of cellular Bok is IP_3R associated, suggests that they may be processed by the UPP as a combined unit.

Finally, we examined whether Bok might regulate IP_3R1 proteolysis, since its binding site is adjacent to the site cleaved by caspase-3 during apoptosis [13,39,40] and to one of the chymotrypsin-sensitive sites that is thought to be a flexible, exposed loop [13,32,41,42] (Figure 4C). Interestingly, we found that Bok markedly inhibited chymotrypsin-induced IP_3R1 proteolysis *in vitro*, as gauged by the production of fragments IV and V (Figure 8). Exposure of IP_3R1 immunopurified from transfected cells to chymotrypsin generated free fragments V and IV at ~90 and ~40kDa, respectively (Figure 8A, lanes 2 and 6), and this was almost completely blocked when 3F-Bok was co-expressed with IP_3R1 (lanes 4 and 8). Instead, an ~130kDa fragment was formed that was recognized by both fragment IV- and V-specific antisera, and thus appears to be a cleavage product composed of fragments IV+V (lanes 4 and 8). An analogous result was obtained when IP_3R1 was immunopurified from WT and $Bok^{-/-}$ MEFs; in this case, the generation of free fragments V and IV was much more efficient for material immunopurified from $Bok^{-/-}$ MEFs (Figure 8B, lanes 4 and 8), than for material immuopurified from WT MEFs, in which a band corresponding to fragments IV+V was again observed (lanes 2 and 6). Remarkably, then, it appears that the association of Bok with IP_3Rs inhibits chymotrypsin-induced cleavage at the fragment IV-V junction.

We also examined the sensitivity of IP_3R1 to caspase-3, by monitoring IP_3R1 cleavage in cells undergoing apoptosis (Figure 8C). In response to the kinase inhibitor staurosporine and other pro-apoptotic agents, caspase-3 is activated and IP_3R1 is cleaved into two major fragments, a C-terminal, ~95kDa fragment that may form "leaky" channels, and an ~170kDa fragment that accounts for the remainder of the protein [39,40,43,44]. In the presence of staurosporine, both of these fragments were much more readily visible in $Bok^{-/-}$ MEFs than in WT MEFs, while caspase-3 activation was approximately the same in both cell types (Figure 8C, lanes 3 and 4). Thus, Bok appears to protect IP_3R1 from the proteolytic activity of caspase-3.

Overall, these data indicate that despite binding strongly to IP_3Rs and regulating their expression, Bok does not appear to regulate the Ca^{2+} gating function of IP_3Rs, or the ability of IP_3Rs to be degraded by the UPP. However, Bok is selectively degraded by the UPP in parallel to IP_3Rs and, most importantly, protects IP_3Rs from the proteolytic effects of chymotrypsin *in vitro* and caspase-3 *in vivo* during apoptosis.

DISCUSSION

In summary, we find (i) that Bok binds constitutively to IP_3Rs, (ii) that the determinants of binding appear to be the BH4 domain of Bok and a small peptide in a highly-regulated region of the coupling domain of IP_3Rs, (iii) that the binding of Bok does not seem to regulate the Ca^{2+} mobilizing

function of the channels formed by IP_3Rs, (iii) that Bok is degraded by the UPP in parallel to the degradation of IP_3Rs that occurs when IP_3-dependent cell signaling is persistently activated, and, most importantly, (iv) that Bok protects IP_3Rs from proteolysis *in vitro* and *in vivo* during apoptosis. Overall, these data show that Bok is tightly associated with IP_3Rs and that one of its cellular roles is to control IP_3R proteolysis.

The strength of Bok binding to IP_3Rs is surprising. Clear co-immunoprecipitation of Bok with IP_3Rs was seen using either CHAPS or Triton X-100 as detergents, and remarkably, most, if not all, cellular Bok was found to be IP_3R bound, since Bok was immunodepleted in parallel to IP_3Rs when IP_3Rs were immunoprecipitated. Further, under conditions that allowed for robust Bok binding, the binding of other Bcl-2 family proteins was not detectable. This is perplexing in view of the extensive literature indicating that anti-apoptotic Bcl-2 family members bind to IP_3Rs [11,12,16-21,24-26]. However, evaluation of that literature suggests only relatively weak binding of endogenous pro-apoptotic Bcl-2 family members to endogenous IP_3Rs [18,21,22,45,46], and reveals that many of the studies were conducted with over-expressed proteins, or with purified recombinant protein fragments [18-21,24,26], which may not faithfully mimic physiological interactions. Such relatively weak binding may be beyond the limits of detection under the experimental conditions used herein, which were geared towards the assessment of the particularly strong Bok-IP_3R interaction.

Our studies with Bok and IP_3R mutants indicate that the putative BH4 domain of Bok [3,47] mediates binding to IP_3Rs and that the Bok binding site is located within a small sequence (PSRKKAKEP) found in a highly-regulated region of IP_3Rs, that is likely a surface-exposed loop [32,33,41]. Interestingly, the BH4 domain of Bcl-2 also appears to mediate its binding to IP_3Rs [20,24-26], although the Bcl-2 binding site is located within a completely different IP_3R region (amino acids 1389-1408 of IP_3R1) [25,26]. It has also been shown that the BH4 domain of Bcl-xL binds much more weakly to IP_3Rs than does the Bcl-2 BH4 domain, because it contains an aspartic acid residue instead of a lysine at position X_2 of the BH4 consensus sequence [20] (Figure 4A). Overall, this information indicates that the BH4 domain of Bok and some other Bcl-2 family proteins is critical for mediating binding to IP_3Rs, but that different modes of interaction are possible. Since Bax and Bak also contain a very similar putative BH4 domain (Figure 4A), it is puzzling that they too do not bind to IP_3Rs. The explanation may be that Bok is more localized to the ER and Golgi than Bax and Bak, apparently because of differences in their TM regions [8]. This would place Bok in the proximity of IP_3R receptors, which are also predominantly localized to the ER [13,14], but are also present in the Golgi [48].

The nature of the Bok binding region in IP_3R1 is intriguing. It is obvious that the sequence is highly polar (5 of 9 residues are charged), and it is tempting to speculate that this could drive the interaction with the Bok BH4 domain, which also contains charged residues (Figure 4A). A similar sequence is found in the corresponding region of IP_3R2 (4 of 8 residues are charged), but no such charge density is found in the corresponding region of IP_3R3, which is very different from IP_3R1 and IP_3R2 in this area. This diversity may well account for the ability of Bok to bind strongly to IP_3R1 and IP_3R2, but not to IP_3R3.

The challenge now is to determine the significance of the Bok-IP_3R interaction. The data from MEFs, either replete with or lacking Bok, indicate that Bok does not regulate the ability of IP_3Rs to act as Ca^{2+} channels, or the ability of the ER to sequester Ca^{2+}, at least in unperturbed cells. Further, the processing of activated IP_3Rs by the UPP was not dependent upon the presence of Bok, indicating that it does not play a role in this homeostatic phenomenon [32,33]. Bok did, however, regulate IP_3R expression. This was seen in MEFs, in which lack of Bok increased IP_3R1 expression, but decreased IP_3R2 and IP_3R3 expression. Effects of exogenous Bcl-2 family proteins on IP_3R expression have been seen in other cell types [46,49], although not always [45]. While the basis for these expression changes remains to be defined, overall our results indicate that Bok is not critical to the central function of IP_3Rs, which is to act as IP_3-gated Ca^{2+} channels.

Interestingly, in cells in which IP_3-dependent signaling was persistently activated, Bok was degraded by the UPP, while the levels of other Bcl-2 family protein remained unaltered. It is well known that IP_3Rs are degraded by the UPP under these conditions [32,33] and the finding that

Bok is degraded in parallel is consistent with the notion that endogenous Bok and IP_3Rs are constitutively associated. Bok and IP_3Rs may well be extracted from the ER membrane, ubiquitinated and degraded as a unit [38], and it will be interesting to see whether the proteins that mediate IP_3R ubiquitination (the erlin1/2 complex and the ubiquitin ligase RNF170 [30,34]) also mediate Bok ubiquitination. IP_3R degradation by the UPP is seen to be a homeostatic response to persistent cell stimulation that allows cells to reduce the sensitivity of their Ca^{2+} stores to IP_3 and thus suppress Ca^{2+} mobilization [32,33]. That Bok should be degraded in parallel is currently of unknown significance, but given that Bok is generally considered to be pro-apoptotic, loss of Bok could well influence the viability of the stimulated cells.

The most significant effect of Bok binding appears to be inhibition of IP_3R proteolysis by chymotrypsin *in vitro* at the fragment IV-V junction (at amino acid ~1932), and by caspase-3 *in vivo* during apoptosis (at amino acid 1891). It seems entirely plausible that this could result from steric hindrance by Bok of the ability of chymotrypsin and caspase-3 to access their cleavage sites. This inhibitory effect of Bok may well be biologically relevant, as the C-terminal IP_3R1 fragment resulting from caspase-3 cleavage has been proposed to form an IP_3-insensitive, "leaky" channel that contributes towards the apoptotic cascade [40,43], although this notion is controversial [44,50,51]. Indeed, a very recent study shows that the IP_3R1 fragments generated by caspase-3 remain associated and form functional channels fully capable of responding to IP_3 and contributing towards apoptosis [44]. Thus, the significance of the inhibitory effect of Bok on IP_3R proteolysis will be better understood when the significance of IP_3R cleavage by caspase-3 is fully elucidated.

The cellular role of Bok has been an enigma since its discovery [1,2,7]. Based on its similarity to Bax and Bak and over-expression studies, it has been assumed that Bok is pro-apoptotic [4-9] and, indeed, very recent evidence from $Bax^{-/-}$ $Bok^{-/-}$ mice indicates that it can act pro-apoptotically in ovaries [52]. Interestingly, however, Bok can also act anti-apoptotically; $Bok^{-/-}$ cells undergo apoptosis more readily than control cells in response to brefeldin A, a drug that inhibits ER to Golgi transport and causes ER stress [8]. Determining the role played by IP_3R binding in these effects of Bok will be a fascinating topic for future studies and should help unravel the subtleties of Bok action.

REFERENCES

1. Youle, R.J. and Strasser, A. (2008) The BCL-2 protein family: opposing activities that mediate cell death. *Nat. Rev. Mol. Cell Biol*. **9**, 47-59.
2. Kelly, P.N. and Strasser, A. (2011) The role of Bcl-2 and its pro-survival relatives in tumourigenesis and cancer therapy. *Cell Death Differ.* **18**, 1414-1424.
3. Westphal, D., Dewson, G., Czabotar, P.E. and Kluck, R.M. (2011) Molecular biology of Bax and Bak activation and action. *Biochim. Biophys. Acta* **1813**, 521-531.
4. Hsu, S.Y., Kaipia, A., McGee, E., Lomeli, M. and Hsueh, A.J.W. (1997) Bok is a pro-apoptotic Bcl-2 protein with restricted expression in reproductive tissues and heterodimerizes with selective anti-apoptotic Bcl-2 family members. *Proc. Natl. Acad. Sci. USA* **94**, 12401-12406.
5. Hsu, S.Y. and Hsueh, A.J.W. (1998) A splicing variant of the Bcl-2 member Bok with a truncated BH3 domain induces apoptosis but does not dimerize with antiapoptotic Bcl-2 proteins *in vitro*. *J. Biol. Chem*. **273**, 30139-30146.
6. Inohara, N., Ekhterae, D., Garcia, I., Carrio, R., Merino, J., Merry, A., Chen, S. and Nunez, G. (1998) Mtd, a novel Bcl-2 family member activates apoptosis in the absence of heterodimerization with Bcl-2 and Bcl-xL. *J. Biol. Chem*. **273**, 8705-8710.
7. Ke, F., Voss, A., Kerr, J.B., O'Reilly, L.A., Tai, L., Echeverry, N., Bouillet, P., Strasser, A. and Kaufmann, T. (2012) BCL-2 family member BOK is widely expressed but its loss has only minimal impact in mice. *Cell Death Differ.* **19**, 915-925.

8. Echeverry, N., Bachmann, D., Ke, F., Strasser, A., Simon, H-U. and Kaufmann, T. (2013) Intracellular localization of the BCL-2 family member BOK and functional implications. *Cell Death Differ.* **20**, 785-799.
9. Bartholomeusz, G., Wu, Y., Seyed, M.A., Xia, W., Kwong, K-Y., Hortobagyi, G. and Hung, M-C. (2006) Nuclear translocation of the pro-apoptotic Bcl-2 family member Bok induces apoptosis. *Mol. Carcinogenesis* **45**, 73-83.
10. Beroukhim, R., Mermel, C.H., Porter, D., Wei, G., Raychaudhuri, S., Donovan, J., Barretina, J., Boehm, J.S., Dobson, J., Urashima, M., Mc Henry, K.T., Pinchback, R.M., Ligon, A.H., Cho, Y.J., Haery, L., Greulich, H., Reich, M., Winckler, W., Lawrence, M.S., Weir, B.A., Tanaka, K.E., Chiang, D.Y., Bass, A.J., Loo, A., Hoffman, C., Prensner, J., Liefeld, T., Gao, Q., Yecies, D., Signoretti, S., Maher, E., Kaye, F.J., Sasaki, H., Tepper, J.E., Fletcher. J.A., Tabernero, J., Baselga, J., Tsao, M.S., Demichelis, F., Rubin, M.A., Janne, P.A., Daly, M.J., Nucera, C., Levine, R.L., Ebert, B.L., Gabriel, S., Rustgi, A.K., Antonescu, C.R., Ladanyi, M., Letai, A., Garraway, L.A., Loda, M., Beer, D.G., True, L.D., Okamoto, A., Pomeroy, S.L., Singer, S., Golub, T.R., Lander, E.S., Getz, G., Sellers, W.R. and Meyerson, M. (2010) The landscape of somatic copy-number alteration across human cancers. *Nature* **463**, 899-905.
11. Distelhorst, C.W and Bootman, M.D. (2011) Bcl-2 interaction with the inositol 1,4,5-trisphosphate receptor: Role in Ca^{2+} signaling and disease. *Cell Calcium* **50**, 234-241.
12. Akl, H. and Bultynck, G. (2012) Altered Ca^{2+} signaling in cancer cells: Proto-oncogenes and tumor suppressors. *Biochim. Biophys. Acta* (in press).
13. Foskett, J. K., White, C., Cheung, K. H. and Mak, D. D. (2007) Inositol trisphosphate receptor Ca^{2+} release channels. *Physiol. Rev*. **87**, 593-658.
14. Seo, M.D., Velamakanni, S., Ishiyama, N., Stathopulos, P.B., Rossi, A.M., Khan, S.A., Dale, P., Li, C., Ames, J.B., Ikura, M. and Taylor, C.W. (2012) Structural and functional conservation of key domains in $InsP_3$ and ryanodine receptors. *Nature* **483**, 108-112.
15. Wojcikiewicz, R. J. H. (1995) Type I, II and III inositol 1,4,5-trisphosphate receptors are unequally susceptible to down-regulation and are expressed in markedly different proportions in different cell types. *J. Biol. Chem.* **270,** 11678-11683.
16. Rizzuto, R., Marchi, S., Bonora, M., Aguiari, P., Bononi, A., De Stefani, D., Giorgi, C., Leo, S., Rimessi, A., Siviero, R., Zecchini, E. and Pinton, P. (2009) Ca^{2+} transfer from ER to mitochondria: When, how and why. *Biochim. Biophys. Acta* **1787**, 1342-1351.
17. Zhong, F., Davis, M.C., McColl, K.S. and Distelhorst, C.W. (2011) Bcl-2 differentially regulates Ca^{2+} signals according to the strength of T cell receptor activation. *J. Cell Biol.* **172**, 127-137.
18. Rong, Y-P., Aromolaran, A.S., Bultynck, G., Zhong, F., Li, X., McColl, K.S., Matsuyama, S., Herlitze, S., Roderick, H.L., Bootman, M.D., Mignery, G.A., Parys, J.B., De Smedt, H. and Distelhorst, C.W. (2008) Targeting Bcl-2-IP3 receptor interaction to reverse Bcl-2's inhibition of apoptotic calcium signals. *Mol. Cell* **31**, 255-265.
19. Eckenrode, E.F., Yang, J., Velmurugan, G.V., Foskett, J. K. and White, C. (2010) Apoptosis protection by Mcl-1 and Bcl-2 modulation of inositol 1,4,5-trisphosphate receptor-dependent Ca^{2+} signaling. *J. Biol. Chem*. **285**, 13678-13684.
20. Monaco, G., Decrock, E., Akl, H., Ponsaerts, R., Vervliet, T., Luyten, T., De Maeyer, M., Missiaen, L., Distelhorst, C.W., De Smedt, H., Parys, J.B., Leybaert, L. and Bultynck, G. (2012) Selective regulation of IP_3-receptor-mediated Ca^{2+} signaling and apoptosis by the BH4 domain of Bcl-2 *versus* Bcl-xL. *Cell Death Differ.* **19**, 295-309.
21. White, C., Li, C., Yang, J., Petrenko, N.B., Madesh, M., Thompson, C.B. and Foskett, J. K. (2005) The endoplasmic reticulum gateway to apoptosis by Bcl-xL modulation of the $InsP_3R$. *Nat. Cell Biol*. **7**, 1021-1028.
22. Oakes, S.A., Scorrano, L., Opferman, J.T., Bassik, M.C., Nishino, M., Pozzan, T. and Korsmeyer, S.J. (2005) Proapoptotic Bax and Bak regulate the type 1 inositol trisphosphate receptor and calcium leak from the endoplasmic reticulum. *Proc. Natl. Acad. Sci. USA* **102**, 105-110.

23. Jones, R.G., Bui, T., White, C., Madesh, M., Krawczyk, C.M., Lindsten, T., Hawkins, B.J., Kubek, S., Frauwirth, K.A., Wang, Y.L., Conway, S.J., Roderick, H.L., Bootman, M.D., Shen, H., Foskett, J. K. and Thompson, C.B. (2007) The proapoptotic factors Bax and Bak regulate T cell proliferation through control of endoplasmic reticulum Ca^{2+} homeostatsis. *Immunity* **27**, 268-280.
24. Monaco, G., Beckers, M., Ivanova, H., Missiaen, L., Parys, J.B., De Smedt, H. and Bultynck, G. (2012) Profiling of the Bcl-2/Bcl-xL-binding sites on type 1 IP_3 receptor. *Biochem. Biophys. Res. Commun.* **428**, 31-35.
25. Rong, Y-P., Bultynck, G., Aromolaran, A.S., Zhong, F., Parys, J.B., De Smedt, H., Mignery, G.A., Roderick, H.L., Bootman, M.D. and Distelhorst, C.W. (2009) The BH4 domain of Bcl-2 inhibits ER calcium release and apoptosis by binding the regulatory and coupling domain of the IP3 receptor. *Proc. Natl. Acad. Sci. USA* **106**, 14397-14402.
26. Zhong, F., Harr, M.W., Bultynck, G., Monaco, G., Parys, J.B., De Smedt, H., Rong, Y-P., Molitoris, J.K., Lam, M., Ryder, C., Matsuyama, S. and Distelhorst, C.W. (2011) Induction of Ca^{2+}-driven apoptosis in chronic lymphocytic leukemia cells by peptide-mediated disruption of Bcl-2-IP_3 receptor interaction. *Blood* **117**, 2924-2934.
27. Wojcikiewicz, R.J.H., Xu, Q., Webster, J.M., Alzayady, K. and Gao, C. (2003) Ubiquitination and proteasomal degradation of endogenous and exogenous inositol 1,4,5 trisphosphate receptors in αT3-1 anterior pituitary cells. *J. Biol. Chem.* **278,** 940-947.
28. Pearce, M.M.P., Wang, Y., Kelley, G.G. and Wojcikiewicz, R.J.H. (2007) SPFH2 mediates the endoplasmic reticulum-associated degradation of inositol 1,4,5-trisphosphate receptors and other substrates in mammalian cells. *J. Biol. Chem.* **282,** 20104-20115.
29. Oberdorf, J., Webster, J.M., Zhu, C.C., Luo, S.G. and Wojcikiewicz, R.J.H. (1999) Down-regulation of types I, II and III inositol 1,4,5 trisphosphate receptors is mediated by the ubiquitin / proteasome pathway. *Biochem. J.* **339,** 453-461.
30. Lu, J.P., Wang, Y., Sliter, D.A., Pearce, M.M.P. and Wojcikiewicz, R.J.H. (2011) RNF170, an endoplasmic reticulum membrane ubiquitin ligase, mediates inositol 1,4,5-trisphosphate receptor ubiquitination and degradation. *J. Biol. Chem.* **286,** 24426-24433.
31. Soulsby, M.D. and Wojcikiewicz, R.J.H. (2007) Calcium mobilization via type III inositol 1,4,5-trisphosphate receptors is not altered by PKA-mediated phosphorylation of serines 916, 934 and 1832. *Cell Calcium* **42,** 261-270.
32. Wojcikiewicz, R.J.H., Pearce, M.M.P., Sliter, D.A. and Wang, Y. (2009) When worlds collide: IP_3 receptors and the ERAD pathway. *Cell Calcium* **46**, 147-153.
33. Wojcikiewicz, R.J.H. (2012) Inositol 1,4,5-trisphosphate receptor degradation pathways. *WIREs Membr. Transp. Signal.* **1**, 126-135.
34. Pearce, M.M.P., Wormer, D.B., Wilkens, S. and Wojcikiewicz, R.J.H. (2009) An endoplasmic reticulum (ER) membrane complex composed of SPFH1 and SPFH2 mediates the ER-associated degradation of inositol 1,4,5-trisphosphate receptors. *J. Biol. Chem.* **284,** 10433-10445.
35. Xu, Q., Farah, M., Webster, J.M. and Wojcikiewicz, R.J.H. (2004) Bortezomib rapidly suppresses ubiquitin thiolesterification to ubiquitin-conjugating enzymes and inhibits ubiquitination of histones and type I inositol 1,4,5-trisphosphate receptors. *Mol. Cancer. Ther.* **3,** 1263-1269.
36. Kelley, G.G., Kaproth-Joslin, K.A., Reks, S.E., Smrcka, A.V. and Wojcikiewicz, R.J.H. (2006) G-protein-coupled receptor agonists activate endogenous phospholipase Cε and phospholipase Cβ3 in a temporally distinct manner. *J. Biol. Chem.* **281,** 2639-2648.
37. Wojcikiewicz, R.J.H., Tobin, A.B. and Nahorski, S.R. (1994) Muscarinic receptor-mediated inositol 1,4,5-trisphosphate formation in SH-SY5Y neuroblastoma cells is regulated acutely by cytosolic Ca^{2+} and by rapid desensitization. *J. Neurochem.* **63,** 177-185.
38. Vembar, S.S. and Brodsky, J.L. (2008) One step at a time: endoplasmic reticulum-associated degradation. *Nature Rev. Mol. Cell Biol.* **9**, 944-957.
39. Hirota, J., Furuichi, T. and Mikoshiba, K. (1999) Inositol 1,4,5-trisphosphate receptor type 1 is a substrate for caspase-3 and is cleaved during apoptosis in a caspase-3-dependent manner. *J. Biol. Chem.* **274**, 34433-34437.

40. Assefa, Z., Bultynck, G., Szlufcik, K., Nadif Kasri, N., Vermassen, E., Goris, J., Missiaen, L., Callewaert, G., Parys, J.B. and De Smedt, H. (2004) Caspase-3-induced truncation of type 1 inositol trisphosphate receptor type 1 accelerates apoptotic cell death and induces inositol trisphosphate-independent calcium release during apoptosis. *J. Biol. Chem.* **279**, 43227-43236.
41. Yoshikawa, F., Iwasaki, H., Michikawa, T., Furuichi, T. and Mikoshiba, K. (1999) Trypsinized cerebellar inositol 1,4,5-trisphosphate receptor. *J. Biol. Chem.* **274**, 316-327.
42. Maes, K., Missiaen, L., Parys, J.B., De Smet, P., Sienaert, I., Waelkens, E., Callewaert, G. and De Smedt, H. (2001) Mapping of the ATP-binding sites on inositol 1,4,5-trisphosphate receptor type 1 and type 3 homotetramers by controlled proteolysis and photoaffinity labeling. *J. Biol. Chem.* **276**, 3492-3497.
43. Verbert, L., Lee, B., Kocks, S.L., Assefa, Z., Parys, J.B., Missiaen, L., Callewaert, G., Fissore, R.A., De Smedt, H. and Bultynck, G. (2008) Caspase-3-truncated type 1 inositol 1,4,5- trisphosphate receptor enhances intracellular Ca^{2+} leak and disturbs Ca^{2+} signalling. *Biol. Cell.* **100**, 39-49.
44. Alzayady, K., Chandrasekhar, R. and Yule, D.I. (2013) Fragmented inositol 1,4,5-trisphosphate receptors retain tetrameric architecture and form functional Ca^{2+} release channels. *J. Biol. Chem.* (in press).
45. Chen, R., Valencia, I., Zhong, F., McColl, K.S., Roderick, H.L., Bootman, M.D., Berridge, M.J., Conway, S.J., Holmes, A.B., Mignery, G.A., Velez, P. and Distelhorst, C.W. (2004) Bcl-2 functionally interacts with inositol 1,4,5 trisphosphate receptors to regulate calcium release from the ER in response to inositol 1,4,5 trisphosphate. *J. Cell Biol.* **166**, 193-203.
46. Hanson, C.J., Bootman, M.D., Distelhorst, C.W., Wojcikiewicz, R.J.H. and Roderick, H.L. (2008) Bcl-2 suppresses Ca^{2+} release through inositol 1,4,5-trisphosphate receptors and inhibits Ca^{2+} uptake by mitochondria without affecting ER calcium store content. *Cell Calcium* **44**, 324-338.
47. Kvansakul, M., Yang, H., Fairlie, W.D., Czabotar, P.E., Fischer, S.F., Perugini, M.A., Huang, D.C.S. and Colman, P.M. (2008) Vaccinia virus anti-apoptotic F1L is a novel Bcl-2-like domain-swapped dimer that binds a highly selective subset of BH3-containing death ligands. *Cell Death Differ.* **15**, 1564-1571.
48. Pizzo, P., Lissandron, V. and Pozzan, T. (2010) The trans-golgi compartment: A new distinct intracellular Ca^{2+} store. *Commun. Integr. Biol.* **3**, 462-464.
49. Li, C., Fox, C.J., Master, S.R., Bindokas, V.P., Chodosh, L.A. and Thompson, C.B. (2002) Bcl-xL affects Ca^{2+} homeostasis by altering expression of inositol 1,4,5-trisphosphate receptors. *Proc. Natl. Acad. Sci. USA* **99**, 9830-9835.
50. Elkoreh, G., Blais, V., Beliveau, E., Guillemette, G. and Denault, J-B. (2012) Type 1 inositol 1,4,5-trisphosphate receptor is a late substrate of caspases during apoptosis. *J. Cell. Biochem.* **113**, 2775-2784.
51. Akimzhanov, A.M., Barral, J.M. and Boehning, D. (2013) Caspase 3 cleavage of the inositol 1,4,5-trisphosphate receptor does not contribute to apoptotic calcium release. *Cell Calcium* **53**, 152-158.
52. Ke, F., Bouillet, P., Kaufmann, T., Strasser, A., Kerr, J. and Voss, A.K. (2013) Consequences of the combined loss of BOK and BAK or BOK and BAX. *Cell Death Dis.* **4**, e650.

FOOTNOTES

The authors thank Danielle Sliter and Jennifer Vella for assisting with the initial identification of Bok, Danielle Sliter for helpful suggestions and for providing the Bax and Bak antibodies and the $IP_3R1HA^{\Delta 1\text{-}2268}$ construct, Andreas Strasser for providing the $Bok^{-/-}$ MEFs, and National Institutes of Health Grant DK049194 for financial support.

The abbreviations used are: IP_3, inositol 1,4,5-trisphosphate; IP_3R, inositol 1,4,5-trisphosphate receptor; ER, endoplasmic reticulum; UPP, ubiquitin-proteasome pathway; GnRH, gonadotropin-releasing hormone; LPA, oleoyl-L-α-lysophosphatidic acid; BH, Bcl-2 homology; MEF, mouse embryonic fibroblast; $[Ca^{2+}]_c$, cytosolic Ca^{2+} concentration.

FIGURE LEGENDS

Figure 1. Bok co-immunoprecipitates with IP_3Rs Cells were harvested with 1% CHAPS lysis buffer, and immunoprecipitates were prepared and subjected to SDS-PAGE (n=2). A) The 20-25kDa region of a silver-stained gel of an anti-IP_3R1 immunoprecipitate from αT3 cells is shown and the 23 kDa band marked with an arrow was identified by mass spectrometry as Bok. B) αT3 cells were treated for the indicated times with 100nM GnRH, and anti-IP_3R1 immunoprecipitates (lanes 2-4) and controls (lanes 1 and 5) were probed in immunoblots for IP_3R1, erlin2 and Bok. C) Using MEFs, anti-IP_3R1 and anti-IP_3R3 immunoprecipitates (lanes 2 and 3), and a control (lane 1) were probed in immunoblots for IP_3R1, IP_3R3, erlin2 (negative control) and Bok. Note that because of IP_3R heterotetramerization [13,15], anti-IP_3R1 recovers some IP_3R3, and anti-IP_3R3 recovers some IP_3R1. Mouse monoclonal anti-IP_3R3 was used for these experiments. D) Using αT3 cells, anti-IP_3R1 immunoprecipitates and input cell lysates were probed in immunoblots for the proteins indicated.

Figure 2. Immunodepletion of IP_3R1 causes equivalent immunodepletion of Bok. Cells were harvested with 1% CHAPS lysis buffer, lysates were incubated without or with anti-IP_3R1, and immunoprecipitates and post-immunoprecipitation lysates were subjected to SDS-PAGE. Immunoblots were then probed for IP_3R1 and Bok, and for erlin2, which served as a loading control for cell lysates (n=2).

Figure 3. Bok binds selectively to IP_3R1 and IP_3R2
HEK 293T cells were transfected with cDNAs encoding 3F-Bok and/or each IP_3R type and 24h later were harvested with 1% CHAPS lysis buffer, lysates were incubated with anti-IP_3R1, anti-IP_3R2, anti-IP_3R3, or anti-FLAG, and immunoprecipitates and input lysates were subjected to SDS-PAGE (n=3). Gels were then either stained with Coomassie blue, or immunoblots were probed for IP_3R1-3 (with anti-IP_3R1-3) or 3F-Bok (with anti-FLAG). A. Assessment of 3F-Bok binding to immunoprecipitated IP_3R1, IP_3R2 and IP_3R3. B. Demonstration that 3F-Bok and IP_3R1 do not co-immunoprecipitate when lysates from cells expressing either IP_3R1 or 3F-Bok are mixed and then incubated with anti-IP_3R1 to immunoprecipitate IP_3R1. C. Assessment of IP_3R binding to immunoprecipitated 3F-Bok.

Figure 4. Analysis of the determinants of Bok-IP_3R binding
A. 3F-Bok constructs used to map the region that binds to IP_3Rs. Shown are the N-terminal triple FLAG tag (grey box), the position of the BH1-4 domains [5,6], the transmembrane (TM) region, and the sequence of the putative BH4 domain of mouse Bok, together with that for Bcl-2, Bcl-xl, Bax and Bak. These approximate to the consensus sequence $\Phi_1\Phi_2X_1X_2\Phi_3\Phi_4$, where X is any residue, Φ is a hydrophobic residue, and Φ_3 is an aromatic residue [3,47]. Also shown is the point mutant used to further resolve the binding site. B. HEK 293T cells were transfected with cDNAs encoding 3F-Bok constructs and IP_3R1, and 24h later were harvested with 1% CHAPS lysis buffer, lysates were incubated without or with anti-IP_3R1, immunoprecipitates and input lysates were subjected to SDS-PAGE, and immunoblots were probed for IP_3R1 or the 3F-Bok constructs (n=3). C. IP_3R1HA constructs used to map the region that binds to Bok. Shown are the C-terminal HA tag (thick black line), the positions of the 3 functional domains (the ligand-binding domain, the coupling domain, and the channel domain) [13,14,32], two of the sites (at ~1583 and ~1932) susceptible to proteolysis by chymotrypsin (CT) and two of the proteolytic fragments (IV and V) [13,32,41,42], and the caspase-3 cleavage site (at 1891) [13,39,40]. Numbering is according to the mouse sequence. D. HEK 293T cells were transfected with cDNAs encoding IP_3R1HA constructs and 3F-Bok, and 24h later were harvested with 1% CHAPS lysis buffer, lysates were incubated without or with rabbit polyclonal anti-HA, immunoprecipitates and input lysates were subjected to SDS-PAGE, and immunoblots were probed for 3F-Bok or the IP_3R1HA constructs with mouse monoclonal anti-FLAG or anti-HA (n=3).

Figure 5. Bcl-2 family members in WT and $Bok^{-/-}$ MEFs

Cells were harvested with 1% Triton lysis buffer, lysates (A) and anti-IP_3R1 immunoprecipitates (B) were prepared, samples were subjected to SDS-PAGE, and immunoblots were probed for the proteins indicated (n=3). Additional probing of immunoprecipitates did not reveal any binding of Bcl-xL, Bcl-2 or Bak to IP_3R1 in WT or $Bok^{-/-}$ MEFs (data not shown)

Figure 6. Ca^{2+} signaling in WT and $Bok^{-/-}$ MEFs

A. Cells in suspension were loaded with Fura 2, were exposed to 1μM LPA (arrow) and $[Ca^{2+}]_c$ was calculated from the 340/380 nm fluorescence ratio. EGTA (3mM) was added 1min prior to LPA to reduce extracellular $[Ca^{2+}]$ to ~100nM [37] and eliminate Ca^{2+} entry (n>10). B. Suspensions of permeabilized cells were exposed to increasing IP_3 concentrations in the presence of Fura-2, and $[Ca^{2+}]$ was calculated from the 340/380 nm fluorescence ratio (n=2).

Figure 7. Degradation of IP_3Rs and Bok by the UPP in MEFs and αT3 cells

A. MEFs were incubated with 10μM LPA and 10μM MG132 for the times indicated, were harvested with 1% Triton lysis buffer, lysates were prepared, samples were subjected to SDS-PAGE, and immunoblots were probed with anti-IP_3R1-3 and anti-Bok as indicated. The histograms show combined quantitated IP_3R1-3 and Bok immunoreactivity normalized to WT t=0 values from multiple independent experiments (n≥3). B. MEFs were incubated without or with 10μM LPA for 50min, in the absence or presence of 10μM MG132 (which was added 10min prior to LPA), were harvested with 1% Triton lysis buffer, anti-IP_3R1 immunoprecipitates were prepared, samples were subjected to SDS-PAGE, and immunoblots were probed with anti-ubiquitin, anti-IP_3R1 and anti-Bok as indicated (n=2). C. αT3 cells were incubated without or with 1μM GnRH for 2h, were harvested with 1% CHAPS lysis buffer, lysates were prepared, samples were subjected to SDS-PAGE, and immunoblots were probed for the proteins indicated (n=2). D. αT3 cells were incubated with 1μM GnRH for the times indicated in the absence or presence of MG132 (which was added 30min prior to GnRH), and were processed as in C. The histograms show combined quantitated IP_3R1 or Bok immunoreactivity from multiple independent experiments (n=3). E. αT3 cells were incubated without or with 1μM GnRH for 15min, in the presence of 10μM MG132 (which was added 30min prior to GnRH), were harvested with 1% CHAPS lysis buffer, anti-IP_3R1 immunoprecipitates were prepared, samples and controls (lanes 3 and 6) were subjected to SDS-PAGE, and immunoblots were probed with anti-ubiquitin and anti-Bok as indicated (n=2).

Figure 8. Effects of Bok on IP_3R1 proteolysis.

A and B. Anti-IP_3R1 immunoprecipitates, prepared from transfected HEK 293T cells or MEFs with 1% CHAPS lysis buffer, were washed with ice-cold PBS, were incubated with 1μg/ml chymotrypsin (CT) for 15 minutes at 25°C, were boiled for 5 minutes in gel-loading buffer [29], samples were subjected to SDS-PAGE, and immunoblots were probed for fragment V with anti-$IP_3R1^{2731-2749}$ and fragment IV with anti-$IP_3R1^{1829-1848}$ (n=2). IP_3R1-derived immunoreactive bands are indicated with arrows, as is cross-reacting IgG heavy chain at ~50kDa, and a probable IgG-derived fragment at ~35kDa. C. Cells were incubated with 1μM staurosporine (SST) for 14h, were harvested with 1% Triton lysis buffer, lysates were subjected to SDS-PAGE, and immunoblots were probed with anti-$IP_3R1^{2731-2749}$ and anti-$IP_3R1^{679-727}$ to detect C- and N-terminal IP_3R1 fragments, respectively, and for the other proteins indicated. Erlin2 served as a loading control (n=2).

FIGURE 1

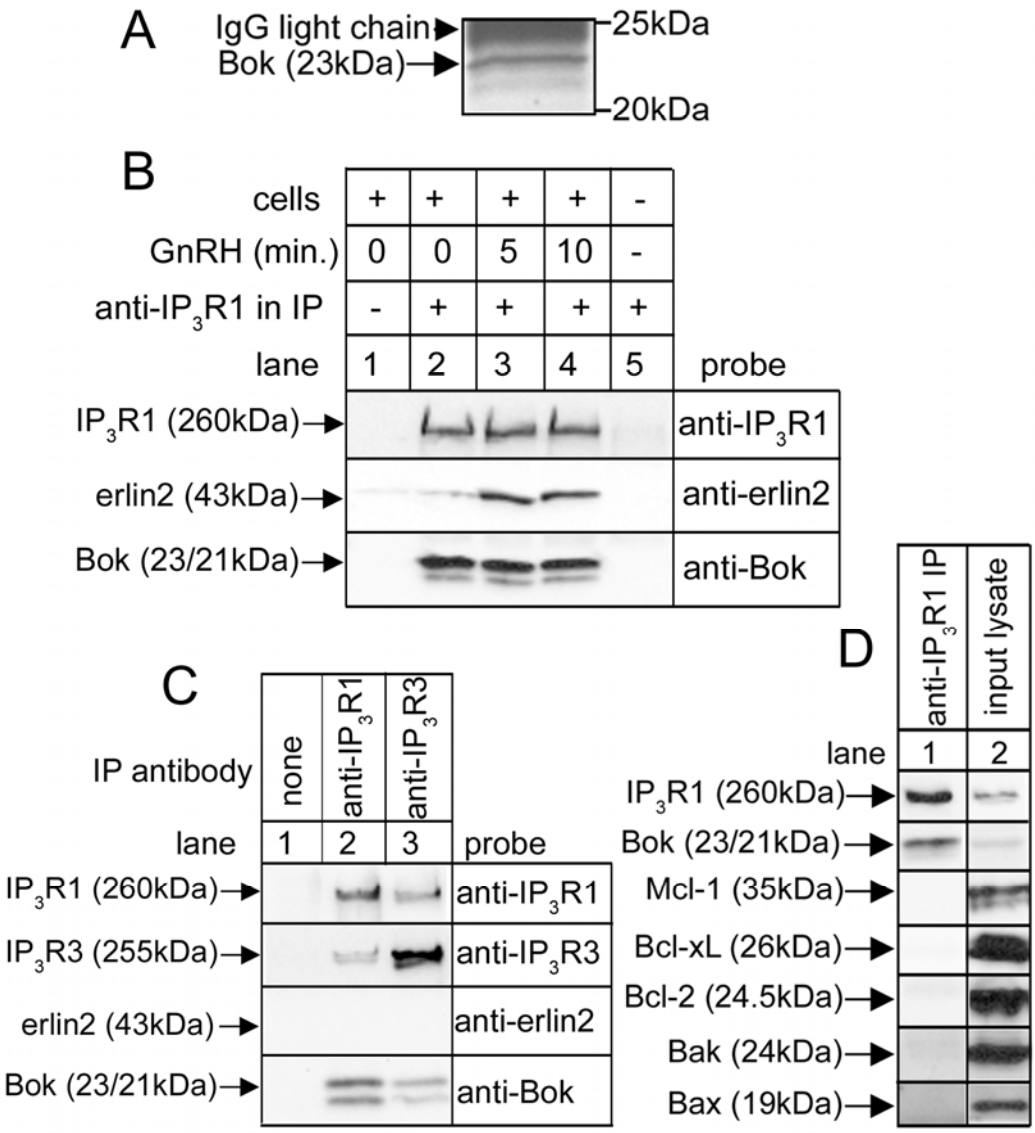

Downloaded from http://www.jbc.org/ at Universitaetsspital-Bibliothek USB on December 5, 2013

FIGURE 2

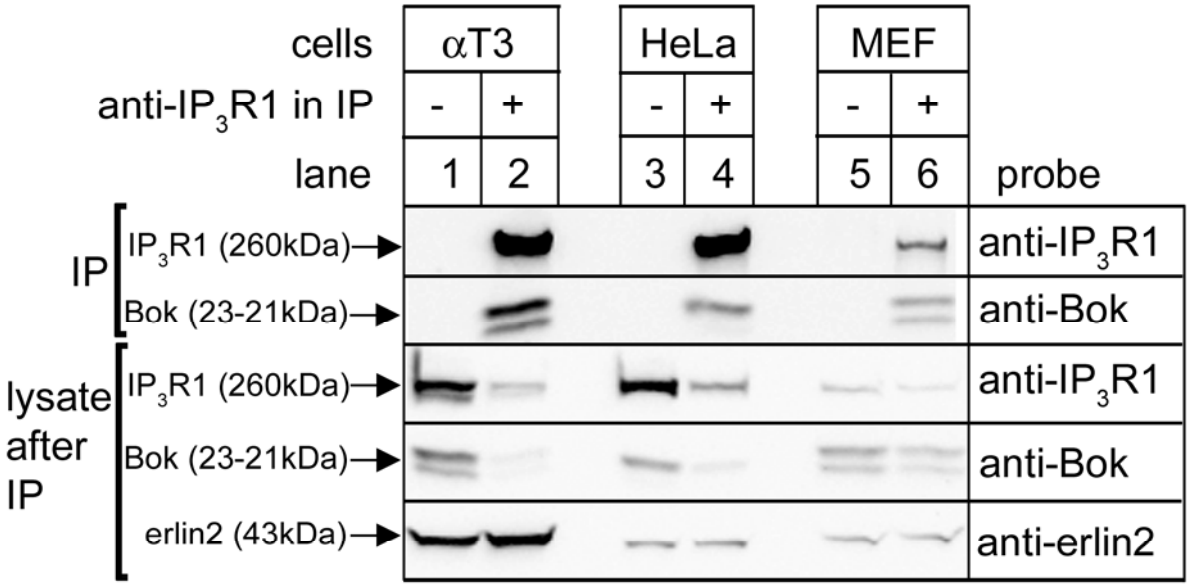

Downloaded from http://www.jbc.org/ at Universitaetsspital-Bibliothek USB on December 5, 2013

FIGURE 3

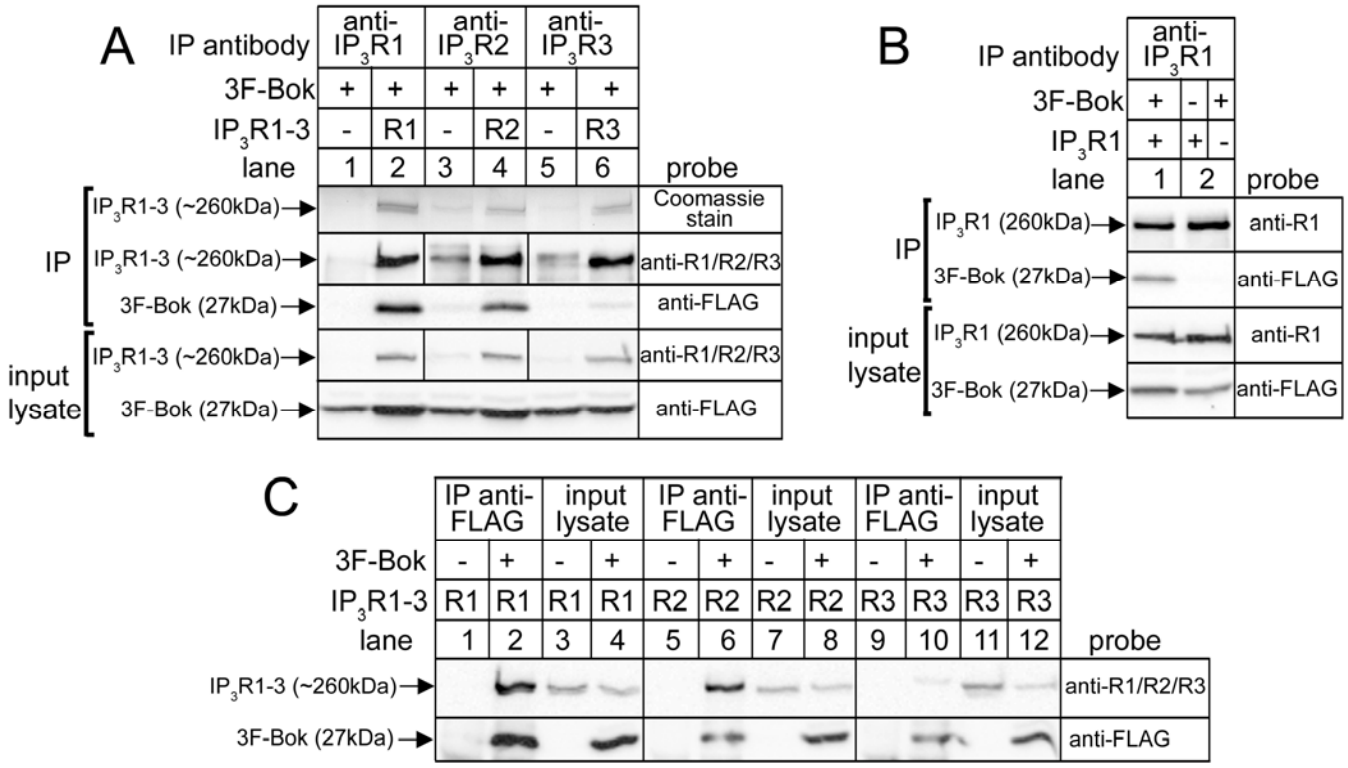

Downloaded from http://www.jbc.org/ at Universitaetsspital-Bibliothek USB on December 5, 2013

FIGURE 4

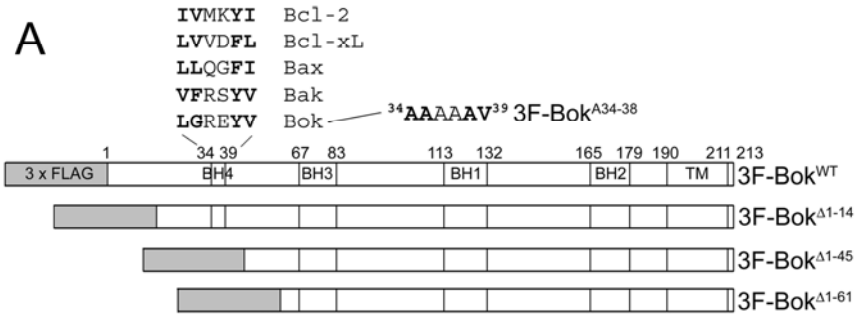
A
IVMKYI Bcl-2
LVVDFL Bcl-xL
LLQGFI Bax
VFRSYV Bak
LGREYV Bok
34AAAAAV39 3F-BokA34-38
1 34 39 67 83 113 132 165 179 190 211 213
3 x FLAG
BH4
BH3
BH1
BH2
TM
3F-BokWT
3F-BokΔ1-14
3F-BokΔ1-45
3F-BokΔ1-61

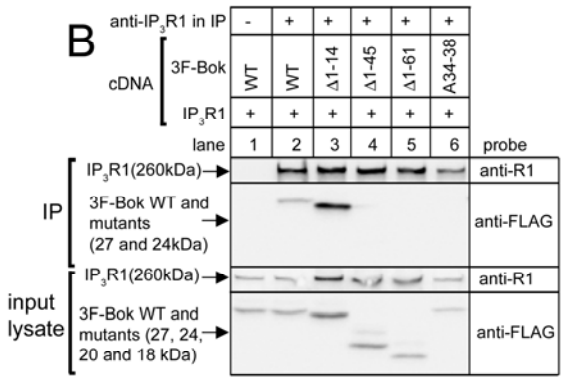
B
anti-IP3R1 in IP
cDNA
3F-Bok
IP3R1
WT
WT
Δ1-14
Δ1-45
Δ1-61
A34-38
lane 1 2 3 4 5 6
probe
IP
IP3R1(260kDa)
anti-R1
3F-Bok WT and mutants (27 and 24kDa)
anti-FLAG
input lysate
IP3R1(260kDa)
anti-R1
3F-Bok WT and mutants (27, 24, 20 and 18 kDa)
anti-FLAG

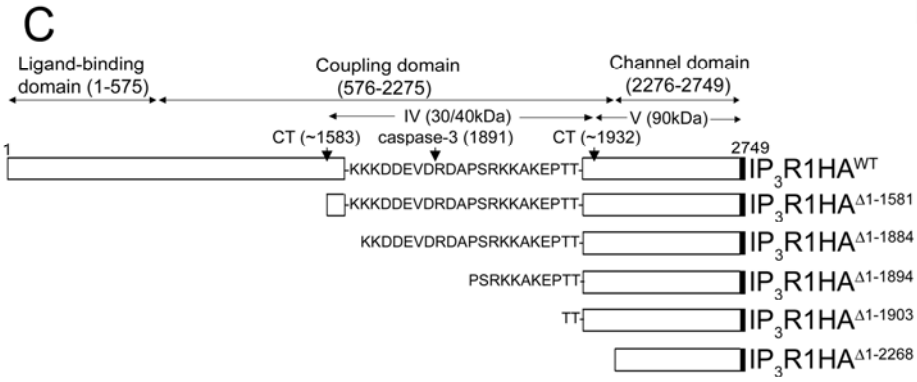
C
Ligand-binding domain (1-575)
Coupling domain (576-2275)
Channel domain (2276-2749)
IV (30/40kDa)
V (90kDa)
CT (~1583)
caspase-3 (1891)
CT (~1932)
1
2749
KKKDDEVDRDAPSRKKAKEPTT
IP3R1HAWT
IP3R1HAΔ1-1581
KKDDEVDRDAPSRKKAKEPTT
IP3R1HAΔ1-1884
PSRKKAKEPTT
IP3R1HAΔ1-1894
TT
IP3R1HAΔ1-1903
IP3R1HAΔ1-2268

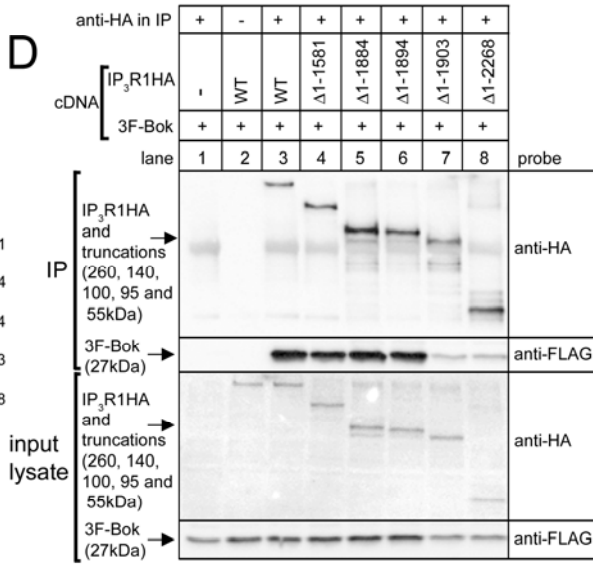
D
anti-HA in IP
cDNA
IP3R1HA
3F-Bok
- WT WT Δ1-1581 Δ1-1884 Δ1-1894 Δ1-1903 Δ1-2268
lane 1 2 3 4 5 6 7 8
probe
IP
IP3R1HA and truncations (260, 140, 100, 95 and 55kDa)
anti-HA
3F-Bok (27kDa)
anti-FLAG
input lysate
IP3R1HA and truncations (260, 140, 100, 95 and 55kDa)
anti-HA
3F-Bok (27kDa)
anti-FLAG

FIGURE 5

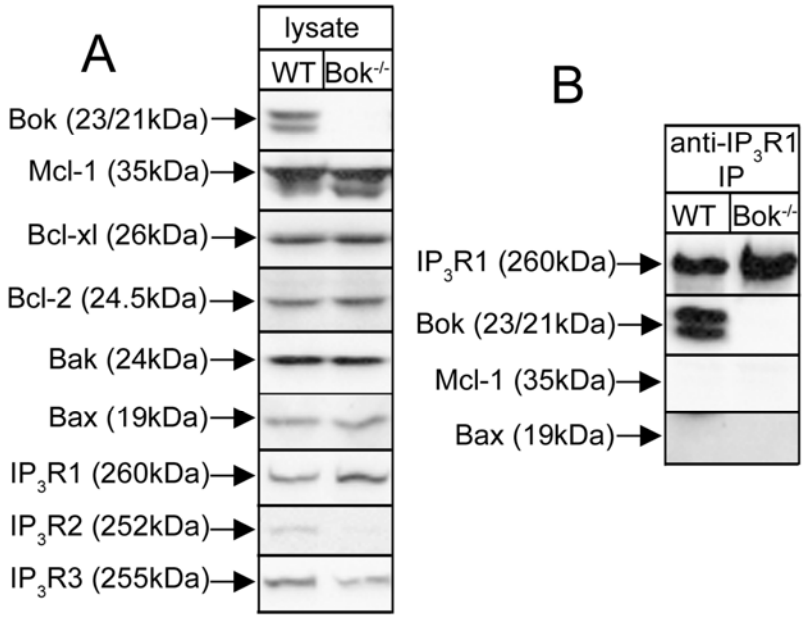

Downloaded from http://www.jbc.org/ at Universitaetsspital-Bibliothek USB on December 5, 2013

FIGURE 6

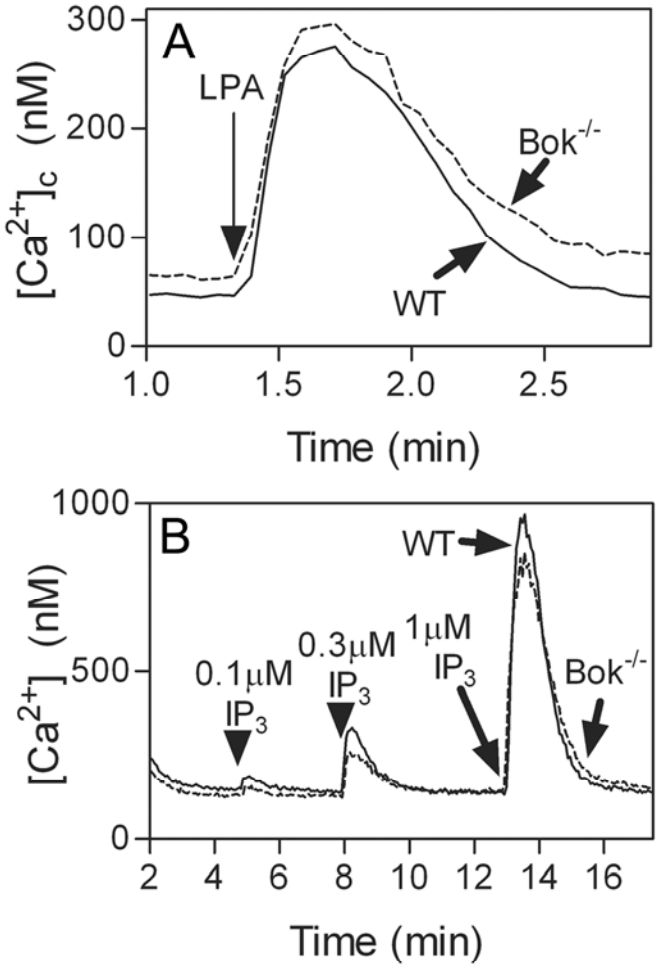

Downloaded from http://www.jbc.org/ at Universitaetsspital-Bibliothek USB on December 5, 2013

FIGURE 7

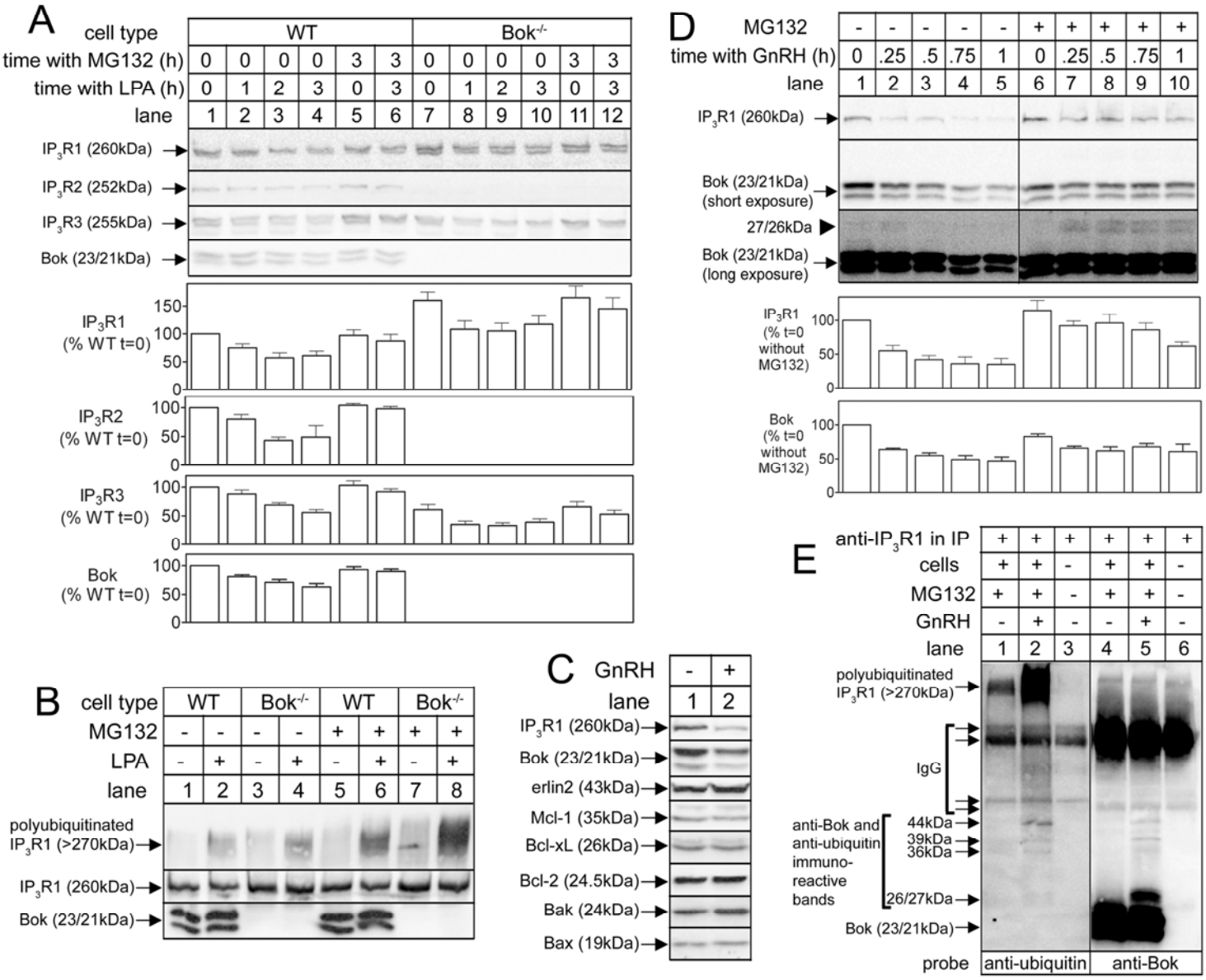
A
cell type
WT
Bok-/-
time with MG132 (h)
time with LPA (h)
lane
IP3R1 (260kDa)
IP3R2 (252kDa)
IP3R3 (255kDa)
Bok (23/21kDa)
IP3R1 (% WT t=0)
IP3R2 (% WT t=0)
IP3R3 (% WT t=0)
Bok (% WT t=0)
B
cell type
MG132
LPA
lane
polyubiquitinated IP3R1 (>270kDa)
IP3R1 (260kDa)
Bok (23/21kDa)
C
GnRH
lane
IP3R1 (260kDa)
Bok (23/21kDa)
erlin2 (43kDa)
Mcl-1 (35kDa)
Bcl-xL (26kDa)
Bcl-2 (24.5kDa)
Bak (24kDa)
Bax (19kDa)
D
MG132
time with GnRH (h)
lane
IP3R1 (260kDa)
Bok (23/21kDa) (short exposure)
27/26kDa
Bok (23/21kDa) (long exposure)
IP3R1 (% t=0 without MG132)
Bok (% t=0 without MG132)
E
anti-IP3R1 in IP
cells
MG132
GnRH
lane
polyubiquitinated IP3R1 (>270kDa)
IgG
anti-Bok and anti-ubiquitin immuno-reactive bands
44kDa
39kDa
36kDa
26/27kDa
Bok (23/21kDa)
probe
anti-ubiquitin
anti-Bok

FIGURE 8

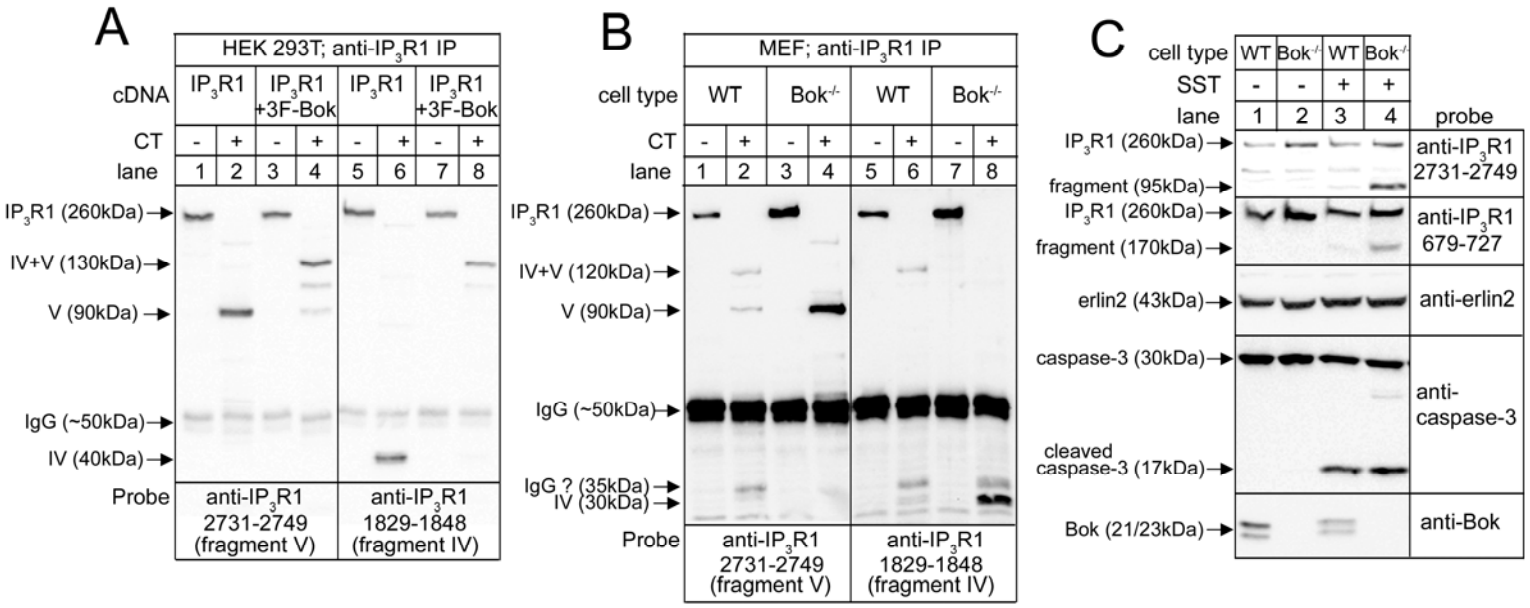
A
HEK 293T; anti-IP3R1 IP
cDNA
IP3R1
IP3R1 +3F-Bok
IP3R1
IP3R1 +3F-Bok
CT
lane
IP3R1 (260kDa)
IV+V (130kDa)
V (90kDa)
IgG (~50kDa)
IV (40kDa)
Probe
anti-IP3R1 2731-2749 (fragment V)
anti-IP3R1 1829-1848 (fragment IV)
B
MEF; anti-IP3R1 IP
cell type
WT
Bok-/-
IP3R1 (260kDa)
IV+V (120kDa)
V (90kDa)
IgG (~50kDa)
IgG ? (35kDa)
IV (30kDa)
C
cell type
SST
lane
probe
IP3R1 (260kDa)
fragment (95kDa)
fragment (170kDa)
erlin2 (43kDa)
caspase-3 (30kDa)
cleaved caspase-3 (17kDa)
Bok (21/23kDa)
anti-IP3R1 2731-2749
anti-IP3R1 679-727
anti-erlin2
anti-caspase-3
anti-Bok