• Research Article

Introduction of two novel devices for investigating the influence of non–mechanical components such as therapeutic qi in acupuncture

Raphael J. Hochstrasser[1,2], P. Christian Endler[1], Sabine D. Klein[3,4]
1. Interuniversity College for Health and Development Graz, Castle of Seggau, 8042 Graz, Austria
2. TCM Practice Aarau, Ochsengässli 7, 5000 Aarau, Switzerland
3. Institute of Complementary Medicine KIKOM, University of Bern, 3010 Bern, Switzerland
4. Research Working Group, Swiss Professional Organization for Traditional Chinese Medicine SBO-TCM, 9113 Degersheim, Switzerland

OBJECTIVE: Acupuncture is a complex intervention consisting of specific and non-specific components. Acupuncture studies more frequently focus on collecting data from the patients' perspective and response, but the acupuncturist's role remains relatively unclear. In order to investigate potential non-mechanical active factors originating from the acupuncturist and transmitted to the patient during treatment, two novel devices for basic research in acupuncture were designed. The Acuplicator allows the researcher to insert needles without touching the needles themselves, while the Veliusator locks the needle in its place so that no mechanical movement can be transferred.
METHODS: The Acuplicator was used to insert needles at Neiguan (PC6) on the right forearm of 23 volunteers. The insertion depth was measured using a depth gauge. The transfer of mechanical movements from the handle to the tip was detected with a precision length gauge with a motoric-tactile sensor.
RESULTS: The mean insertion depth was (12.3 ± 1.5) mm (range 9.5 to 15.0 mm). Even with intense manipulation of the needle handle, no movements within ± 1 μm could be detected at the tip when the needle was locked.
CONCLUSION: With these two devices it will be possible to investigate the influence of non-mechanical components such as therapeutic qi in acupuncture.
KEYWORDS: acupuncture; needling sensation response; acupuncture sensation

DOI: 10.3736/jintegrmed2013030
Hochstrasser RJ, Endler PC, Klein SD. Introduction of two novel devices for investigating the influence of non-mechanical components such as therapeutic qi in acupuncture. *J Integr Med*. 2013; 11(3): 168-174.
Received February 13, 2013; accepted March 26, 2013.

Correspondence: Sabine D. Klein, PhD; E-mail: sabine.klein@kikom.unibe.ch

1 Introduction

Several decades of acupuncture research has yielded results clearly demonstrating that acupuncture is a complex intervention with many mechanisms of action, affecting multiple body systems. Its clinical effectiveness is based on specific characteristics, the primary one being the insertion of needles into particular points on the body. Non-specific components also play a part, and they may include thus-far unexplored non-mechanical and non-psychological active factors that originate from the acupuncturist. Table 1 shows elements of acupuncture treatments that have been investigated or discussed so far.

The treatments are based on a diagnosis according to the rules of traditional Chinese medicine (TCM). Very recently it has been discovered by metabolomics that some patterns described in TCM have a correlate in biomedicine[2,3].

Meridians and acupuncture points are proposed to exert effects and properties beyond the immediate surrounding tissue. Different researchers have proposed that they correspond to connective tissue planes[7] and have lower electrical

Table 1 Specific and non-specific elements of acupuncture treatments which have been investigated and may influence the treatment outcome

Specific for acupuncture
Traditional Chinese medicine (TCM) diagnosis, TCM pattern[1-3]
Meridians[4-6]
Acupuncture points[1,4,6,7]
Needle insertion (except for laser acupuncture) [8,9]
Needle stimulation (mechanical or electrical or laser) [1,10-12]
De qi (perceived by patient) [1,13-16]
Needle grasp (perceived by acupuncturist) [10]
Number of needles[17]
Needle retention time[1,14]
Non-specific for acupuncture
Patient's expectations or belief[14,18,19]
Acupuncturist's expectations or belief[18,20]
Acupuncturist's intention[21]
Communication[22-24]
Therapeutic relationship[22]
Acupuncturist's skills and experience[1,23]
Cultural background[25]
Number or frequency of treatments[1]
Placebo effects[26,27]

impedance[4,5].

Two common strategies for investigating the specific effects of inserting needles at acupuncture points are placebo needles, and sham needling. Researchers invented placebo needles[8,9,28], whereby the needles appear to penetrate the subject's skin upon use, but in fact they do not actually penetrate the skin. Sham points, or so-called non-acupuncture points, do not lie on meridians and have been used as controls. Some studies found that needling these control points often resulted in decreased pain scores[29], so the specificity of acupuncture points had temporarily been questioned, but was substantiated again by a meta-analysis by Vickers *et al*[30].

Nevertheless, the clear improvements reported by patients receiving needling at non-acupuncture points also indicate that other elements influence the treatment outcome. Manual or electrical needle stimulation[1] and the patient's Deqi feeling[1,13,15] are posited to be among these other components.

While the patients' expectations and beliefs are increasingly becoming subjects of further investigation[14,18,19], some aspects of the acupuncturist's role still remain unclear. Is it sufficient to correctly identify the patient's TCM pattern, to put needles into the correct acupuncture point locations and to stimulate them? How important is the acupuncturist's perception of qi[13]? And do non-mechanical and non-psychological active factors originating from the acupuncturist (that we provisionally term "therapeutic qi") contribute to the treatment's effectiveness?

In order to investigate the influence of non-mechanical components such as therapeutic qi, we introduce two novel devices into basic acupuncture research. The first device allows the researcher to insert needles without touching them, while the second one locks the needle in its place, so that it can be stimulated via touch and mental focus, but not by the commonly-used manual manipulations of rotating, or lifting and thrusting.

2 Materials and methods

2.1 Construction of the Acuplicator (device 1)

Figure 1 shows the construction plan of the Acuplicator, which allows the mechanical insertion of acupuncture needles. The force was set to 3 N with a precision scale. Once adjusted, the force remained constant over the series of experiments. The Acuplicator was manufactured from chromium-nickel steel by Soudronic AG, Bergdietikon, Switzerland.

2.2 Needling details

Neiguan (PC6) was chosen as it is a widely-used and well-studied acupuncture point[31,32]. PC6 was localized on the right forearm, 2 cun above the wrist joint space, between the tendons of musculus palmaris longus and musculus flexor carpi radialis. Sterile stainless steel needles with a diameter of 0.3 mm and a length of 59.8 mm (Haeng Lim Seo Won, Kyungki-Do, Korea) were used. The needles had polyethene guide tubes, which were cut to a length of 45.8 mm for the experiments. Needles were inserted using the Acuplicator and were not touched by hand. The insertion depth was subsequently measured using a depth gauge. Experiments were performed by RJH, who is a licensed acupuncturist with 10 years of practical experience.

2.3 Construction of the Veliusator (device 2)

The construction plan of the Veliusator is shown in Figure 2. To ensure the proper mechanical fixing of the acupuncture needle, the device provides two slides with rubber jaws, which clamp the needle after its insertion. The slides are tightened by two fasteners and subsequently locked down by a wing nut. The Veliusator was manufactured from birch plywood by RJH.

To examine whether mechanical movements are transferred from the handle to the needle tip when the needle is fixed within the Veliusator, a needle was inserted into foam simulating a human forearm. The needle was detected between the rubber jaws and the foam by an electro-pneumatic precision length gauge with a motoric-tactile sensor (Heidenhain length gauge 100 mm, Heidenhain GmbH, Traunreut, Germany), a device that measures distances and movements in the range of μm. While

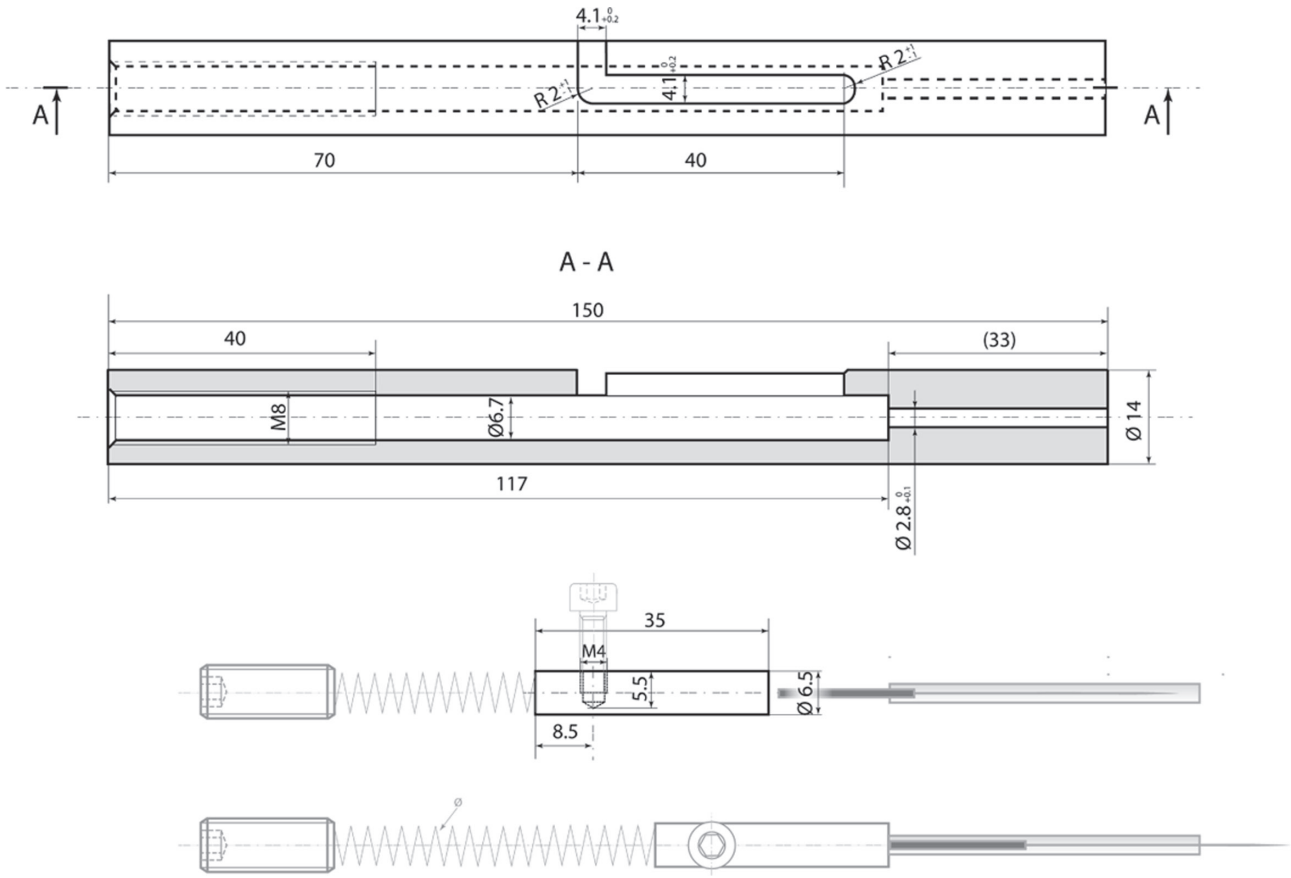

Figure 1 Construction plan of the Acuplicator
Numbers represent distances in mm. A, B and C are corresponding sections on the different views of the device.

intensively moving the needle handle, the movement of the needle on the inside of the Veliusator was monitored by the sensor.

2.4 Ethics

The research proposal was submitted to the regional ethics committee. The proposal was deemed exempt from formal evaluation and no ethical concerns over conducting this study were raised. Written informed consent was obtained from all volunteers, and all data were made anonymous before analysis.

2.5 Participants

Students and staff of the Tao Chi School in Zurich, Switzerland, participated in this study. Of the 23 volunteers, 19 were women and 4 were men; the average age was 38 years (range 27 – 58 years). The experiments were performed at the Tao Chi School, Zurich, Switzerland, from August to December 2012.

2.6 Statistics

SPSS Statistics 20.0 (IBM, Armonk, USA) was used to calculate the mean insertion depth and standard deviation (SD).

3 Results

3.1 Use of the Acuplicator

Figure 3 shows the Acuplicator in use. The needle with a shortened guide tube is inserted into the device. The device is then placed on the acupuncture point and the tension of the pressure spring is released by moving a lever. When the force in the Acuplicator was set to 3 N, the mean insertion depth of the needles at PC6 was 12.3 mm (SD 1.5 mm, range 9.5 – 15.0 mm, n=23).

3.2 Use of the Veliusator

Figure 4 shows how the Veliusator locks the needle that has previously been inserted at PC6. Even with intense manipulation of the needle handle, no movements within ± 1 μm could be detected by a precision length gauge (n=10).

4 Discussion

Acupuncture studies often focus on the specificity

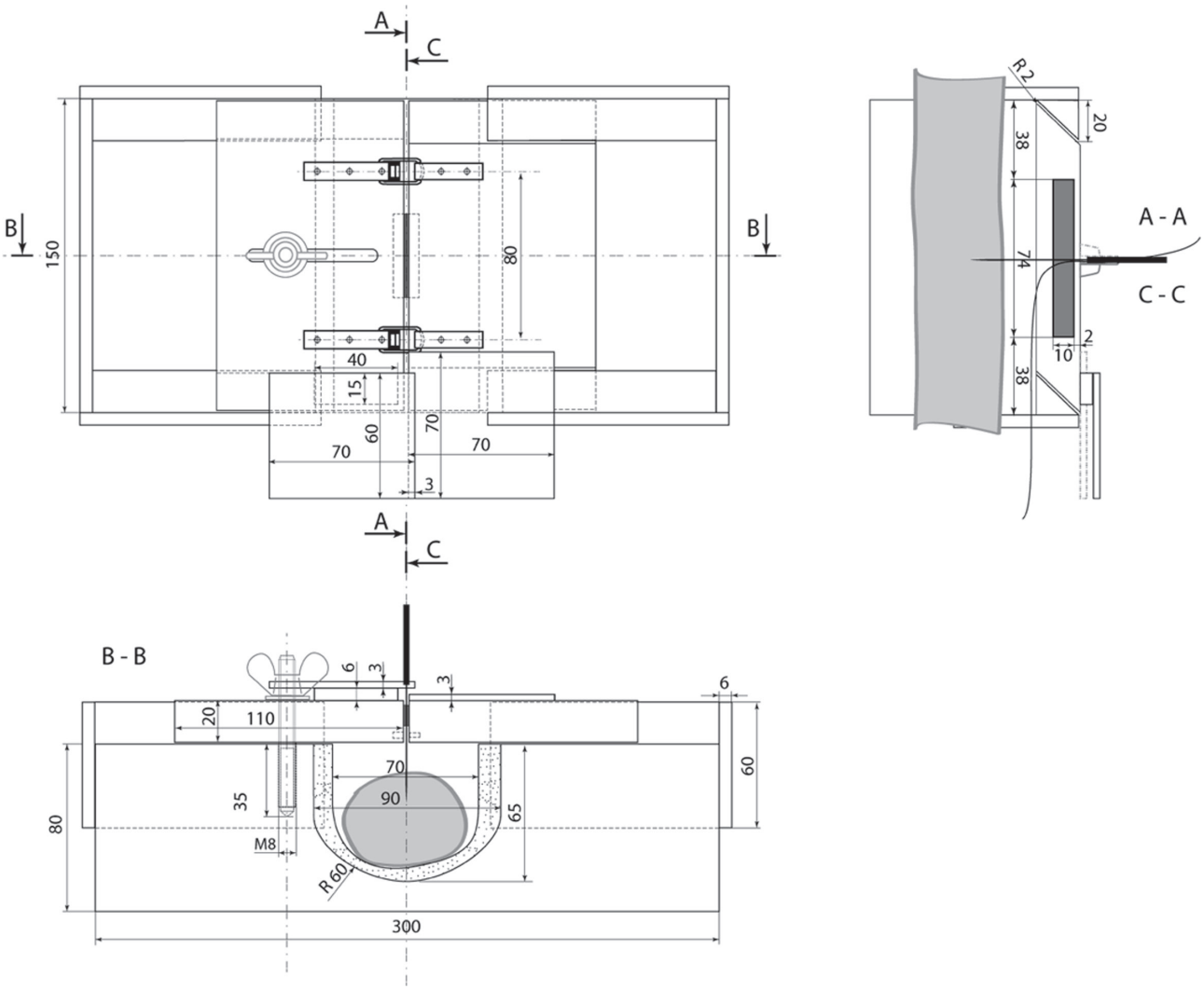

Figure 2 Construction plan of the Veliusator
Numbers represent distances in mm. A, B and C are corresponding sections on the different views of the device.

of needle insertion into predefined points. Thus, tools like placebo needles have been invented to investigate whether penetrating the skin has any effect on outcome parameters in patients or healthy volunteers while blinding the patients[8,33]. Some of these placebo needles are designed in such a way that the acupuncturist himself can be blinded[9,28,34-36]. Mechanical factors are proposed to be responsible for the therapeutic effect of acupuncture[10], and methods have been developed to quantify the displacement and rotation during needling[12].

We hypothesize that there is also a non-mechanical factor transmitted from the acupuncturist via the needle to the patient. Therefore, we have designed a device (Acuplicator) that allows the researcher to insert needles without touching them. The aim of our studies is not to blind the volunteers to needling, but rather to investigate if they can distinguish whether or not the acupuncturist touches the needle handle while mechanical movements to the inserted part of the needle are controlled for by a second device (the Veliusator).

This study has a few limitations. First, with the current version of the Veliusator with its small diameter, only one point on the arm can be used. A larger version, however, could be easily built to be used on legs. Second, the construction of the devices and the experiments with the Acuplicator have been performed by the same investigator. Thus, a potential bias cannot completely be excluded. And third, future experiments that utilize these devices will still have to verify the hypothesis of a non-mechanical factor playing a role in acupuncture.

Our initial results show that the Acuplicator inserts acupuncture needles at PC6 to a depth of (12.3 ± 1.5) mm. This is comparable to the mean penetration depth of

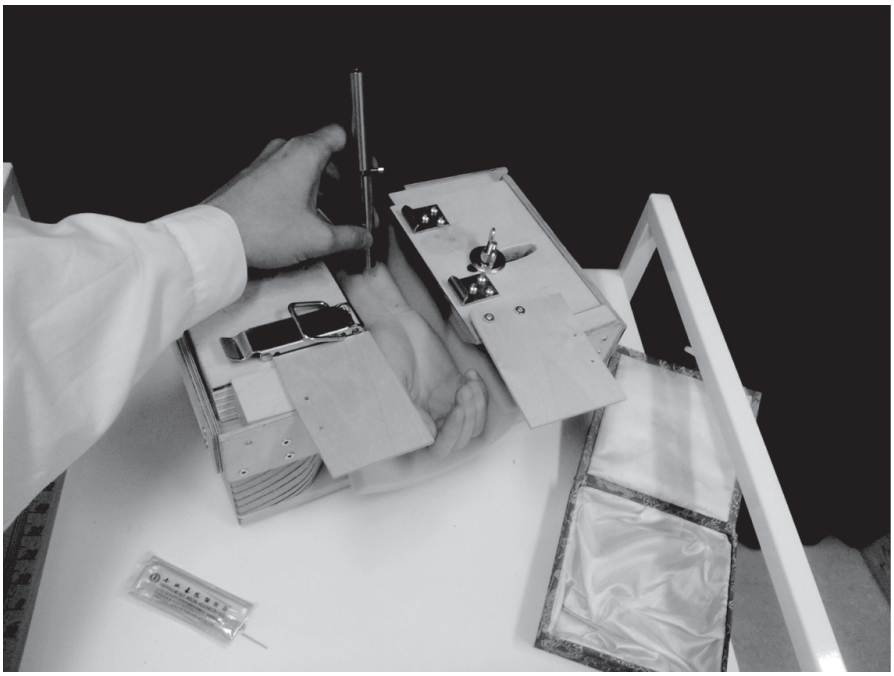

Figure 3 Acuplicator in use.

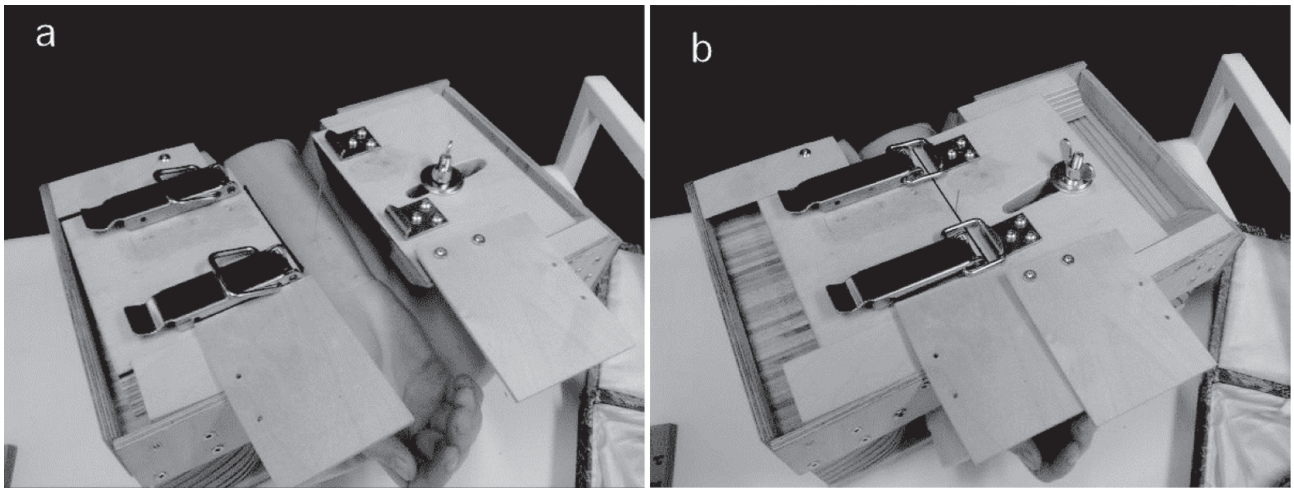

Figure 4 Veliusator in use
(a) With open slides. (b) With locked slides. The wooden boards above the volunteer's hand serve as insulation, so that the volunteer does not feel the warmth of the acupuncturist's hand.

(11.9 ± 3.1) mm manually reached when seeking for Deqi[32]. Experiments are now under way to investigating whether blinded volunteers can tell if the needle handle is touched by an acupuncturist when the needle is locked. To avoid simply feeling the warmth of the acupuncturist's hand, wooden boards were mounted on top of the Veliusator (Figure 4). In yet another set of experiments, we are investigating whether an objectively measurable parameter such as the heart rate variability[37] changes from touching the needle inserted at PC6.

Volunteers can easily be blinded by placing the Veliusator behind a screen through which they hold their arms. The acupuncturist can also be blinded by locking a dummy needle in the Veliusator that has not been inserted into the volunteer's arm, when the setup is done by a second person.

Thus, these novel devices are suitable for studying a

specific aspect of the mechanism of acupuncture.

5 Acknowledgements

We are very grateful to Tao Chi School, Zurich, Switzerland, for providing space for the practical tests, and to Soudronic AG, Bergdietikon, Switzerland, for providing the precision depth gauge and measuring the movement of the needle tip.

This work is part of RJH's doctoral thesis at the Interuniversity College for Health and Development Graz, Austria.

6 Author disclosure statement

The authors have no conflicts of interest to declare.

REFERENCES

1 Hao XA, Xue CC, Dong L, Zheng Z. Factors associated with conflicting findings on acupuncture for tension-type headache: qualitative and quantitative analyses. J Altern Complement Med. 2012 Oct 17. [Epub ahead of print]

2 Sun S, Dai J, Wang W, Cao H, Fang J, Hu YY, Su S, Zhang Y. Metabonomic evaluation of ZHENG differentiation and treatment by Fuzhenghuayu Tablet in hepatitis-B-caused cirrhosis. Evid Based Complement Alternat Med. 2012; 2012: 453503.

3 Wei H, Pasman W, Rubingh C, Wopereis S, Tienstra M, Schroen J, Wang M, Verheij E, van der Greef J. Urine metabolomics combined with the personalized diagnosis guided by Chinese medicine reveals subtypes of pre-diabetes. Mol Biosyst. 2012; 8(5): 1482-1491.

4 Ahn AC, Colbert AP, Anderson BJ, Martinsen OG, Hammerschlag R, Cina S, Wayne PM, Langevin HM. Lectrical properties of acupuncture points and meridians: a systematic review. Bioelectromagnetics. 2008; 29(4): 245-256.

5 Ahn AC, Park M, Shaw JR, McManus CA, Kaptchuk TJ, Langevin HM. Electrical impedance of acupuncture meridians: the relevance of subcutaneous collagenous bands. PLoS One. 2010; 5(7): e11907.

6 Li Y, Zheng H, Witt CM, Roll S, Yu SG, Yan J, Sun GJ, Zhao L, Huang WJ, Chang XR, Zhang HX, Wang DJ, Lan L, Zou R, Liang FR. Acupuncture for migraine prophylaxis: a randomized controlled trial. CMAJ. 2012; 184(4): 401-410.

7 Langevin HM, Yandow JA. Relationship of acupuncture points and meridians to connective tissue planes. Anat Rec. 2002; 269(6): 257-265.

8 Streitberger K, Kleinhenz J. Introducing a placebo needle into acupuncture research. Lancet. 1998; 352(9125): 364-365.

9 Lee S, Lim N, Choi SM, Kim S. Validation study of Kim's sham needle by measuring facial temperature: An N-of-1 randomized double-blind placebo-controlled clinical trial. Evid Based Complement Alternat Med. 2012; 2012: 507937.

10 Langevin HM, Churchill DL, Cipolla MJ. Mechanical signaling through connective tissue: a mechanism for the therapeutic effect of acupuncture. FASEB J. 2001; 15(12): 2275-2282.

11 Langevin HM, Churchill DL, Fox JR, Badger GJ, Garra BS, Krag MH. Biomechanical response to acupuncture needling in humans. J Appl Physiol. 2001; 91(6): 2471-2478.

12 Davis RT, Churchill DL, Badger GJ, Dunn J, Langevin HM. A new method for quantifying the needling component of acupuncture treatments. Acupunct Med. 2012; 30(2): 113-119.

13 Kong J, Gollub R, Huang T, Polich G, Napadow V, Hui K, Vangel M, Rosen B, Kaptchuk TJ. Acupuncture de qi, from qualitative history to quantitative measurement. J Altern Complement Med. 2007; 13(10): 1059-1070.

14 Shi GX, Yang XM, Liu CZ, Wang LP. Factors contributing to therapeutic effects evaluated in acupuncture clinical trials. Trials. 2012; 13: 42.

15 Xiong J, Liu F, Zhang MM, Wang W, Huang GY. De-qi, not psychological factors, determines the therapeutic efficacy of acupuncture treatment for primary dysmenorrhea. Chin J Integr Med. 2012; 18(1): 7-15.

16 Asghar AU, Green G, Lythgoe MF, Lewith G, MacPherson H. Acupuncture needling sensation: the neural correlates of deqi using fMRI. Brain Res. 2010; 1315: 111-118.

17 Ceccherelli F, Gioioso L, Casale R, Gagliardi G, Ori C. Neck pain treatment with acupuncture: does the number of needles matter? Clin J Pain. 2010; 26(9): 807-812.

18 White P, Bishop FL, Prescott P, Scott C, Little P, Lewith G. Practice, practitioner, or placebo? A multifactorial, mixed-methods randomized controlled trial of acupuncture. Pain. 2012; 153(2): 455-462.

19 Colagiuri B, Smith CA. A systematic review of the effect of expectancy on treatment responses to acupuncture. Evid Based Complement Alternat Med. 2012; 2012: 857804.

20 Witt CM, Martins F, Willich SN, Schützler L. Can I help you? Physicians' expectations as predictor for treatment outcome. Eur J Pain. 2012; 16(10): 1455-1466.

21 Greenwood MT. Acupuncture and intention: needling without needles. Med Acupunct. 1999; 11(1): 17-24.

22 MacPherson H, Thorpe L, Thomas K. Beyond needling – therapeutic process in acupuncture care: a qualitative study nested within a low-back pain trial. J Altern Complement Med. 2006; 12(9): 873-880.

23 Liu T. Role of acupuncturists in acupuncture treatment. Evid Based Complement Alternat Med. 2007; 4(1): 3-6.

24 Street RL Jr, Cox V, Kallen MA, Suarez-Almazor ME. Exploring communication pathways to better health: Clinician communication of expectations for acupuncture effectiveness. Patient Educ Couns. 2012; 89(2): 245-251.

25 Chung VC, Ma PH, Lau CH, Wong SY, Yeoh EK, Griffiths SM. Views on traditional Chinese medicine amongst Chinese population: a systematic review of qualitative and quantitative studies. Health Expect. 2012 May 31. [Epub ahead of print]

26 Kamper SJ, Williams CM. The placebo effect: powerful, powerless or redundant? Br J Sports Med. 2013; 47(1): 6-9.

27 Moerman DE. Meaningful placebos – controlling the uncontrollable. N Engl J Med. 2011; 365(2): 171-172.

28 Takakura N, Yajima H. A double-blind placebo needle for acupuncture research. BMC Complement Altern Med. 2007; 7: 31.

29 Haake M, Müller HH, Schade-Brittinger C, Basler HD, Schäfer H, Maier C, Endres HG, Trampisch HJ, Molsberger

A. German Acupuncture Trials (GERAC) for chronic low back pain: randomized, multicenter, blinded, parallel-group trial with 3 groups. Arch Intern Med. 2007; 167(17): 1892-1898.
30 Vickers AJ, Cronin AM, Maschino AC, Lewith G, MacPherson H, Foster NE, Sherman KJ, Witt CM, Linde K; Acupuncture Trialists' Collaboration. Acupuncture for chronic pain: Individual patient data meta-analysis. Arch Intern Med. 2012; 172(19): 1444-1453.
31 Ezzo J, Vickers A, Richardson MA, Allen C, Dibble SL, Issell B, Lao L, Pearl M, Ramirez G, Roscoe JA, Shen J, Shivnan J, Streitberger K, Treish I, Zhang G. Acupuncture-point stimulation for chemotherapy-induced nausea and vomiting. J Clin Oncol. 2005; 23(28): 7188-7198.
32 Streitberger K, Eichenberger U, Schneider A, Witte S, Greher M. Ultrasound measurements of the distance between acupuncture needle tip at P6 and the median nerve. J Altern Complement Med. 2007; 13(5): 585-591.
33 Park J, White A, Stevinson C, Ernst E, James M. Validating a new non-penetrating sham acupuncture device: two randomised controlled trials. Acupunct Med. 2002; 20(4): 168-174.
34 Takakura N, Takayama M, Kawase A, Kaptchuk TJ, Yajima H. Double blinding with a new placebo needle: a further validation study. Acupunct Med. 2010; 28(3): 144-148.
35 Takakura N, Takayama M, Kawase A, Yajima H. Double blinding with a new placebo needle: a validation study on participant blinding. Acupunct Med. 2011; 29(3): 203-207.
36 Takakura N, Takayama M, Kawase A, Yajima H. Tapping-in method (skin penetration technique) with a placebo needle for double-blind acupuncture trials. J Altern Complement Med. 2012 Oct 25. [Epub ahead of print]
37 Anderson B, Nielsen A, McKee D, Jeffres A, Kligler B. Acupuncture and heart rate variability: a systems level approach to understanding mechanism. Explore (NY). 2012; 8(2): 99-106.

Editors-in-Chief: Wei-kang Zhao (China) & Lixing Lao (USA). ISSN 2095-4964. Published by Science Press, China.