Updating the CODE GNSS Orbit Model

R. Dach[1], D. Arnold[1], L. Prange[1],
G. Beutler[1], S. Schaer[2], A. Jäggi[1]

[1] *Astronomical Institute, University of Bern, Switzerland*
[2] *Swiss Federal Office of Topographie, swisstopo*

EUREF 2015 Symposium
03.–05. June 2015, Leipzig, Germany

Overview

Solar Radiation Pressure for GNSS Satellites

Impact on the Reference Frame Parameters

Impact on the GNSS Orbits

Bernese GNSS Software, Version 5.2

Observing the satellite from the Sun

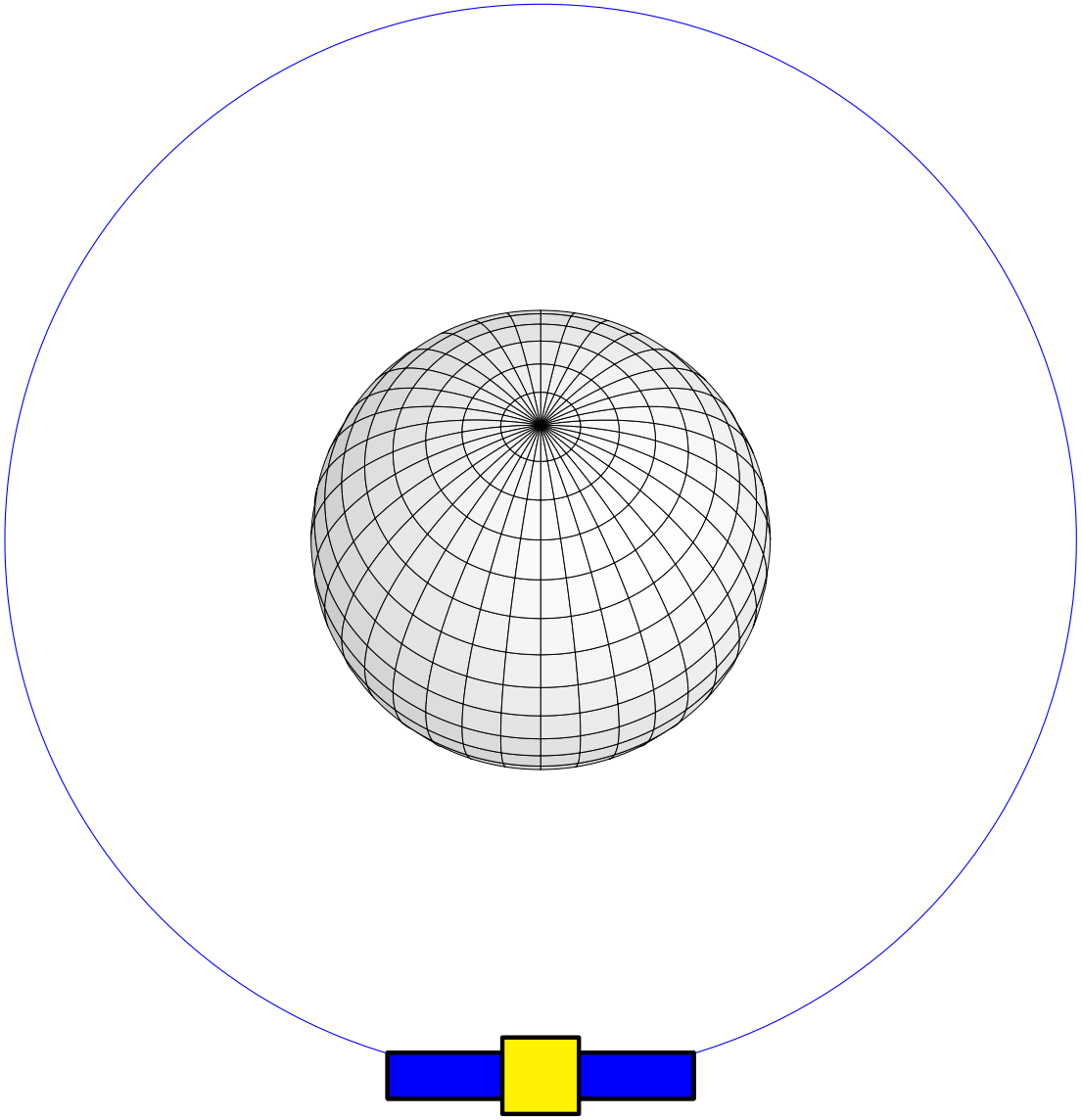

Observing the satellite from the Sun

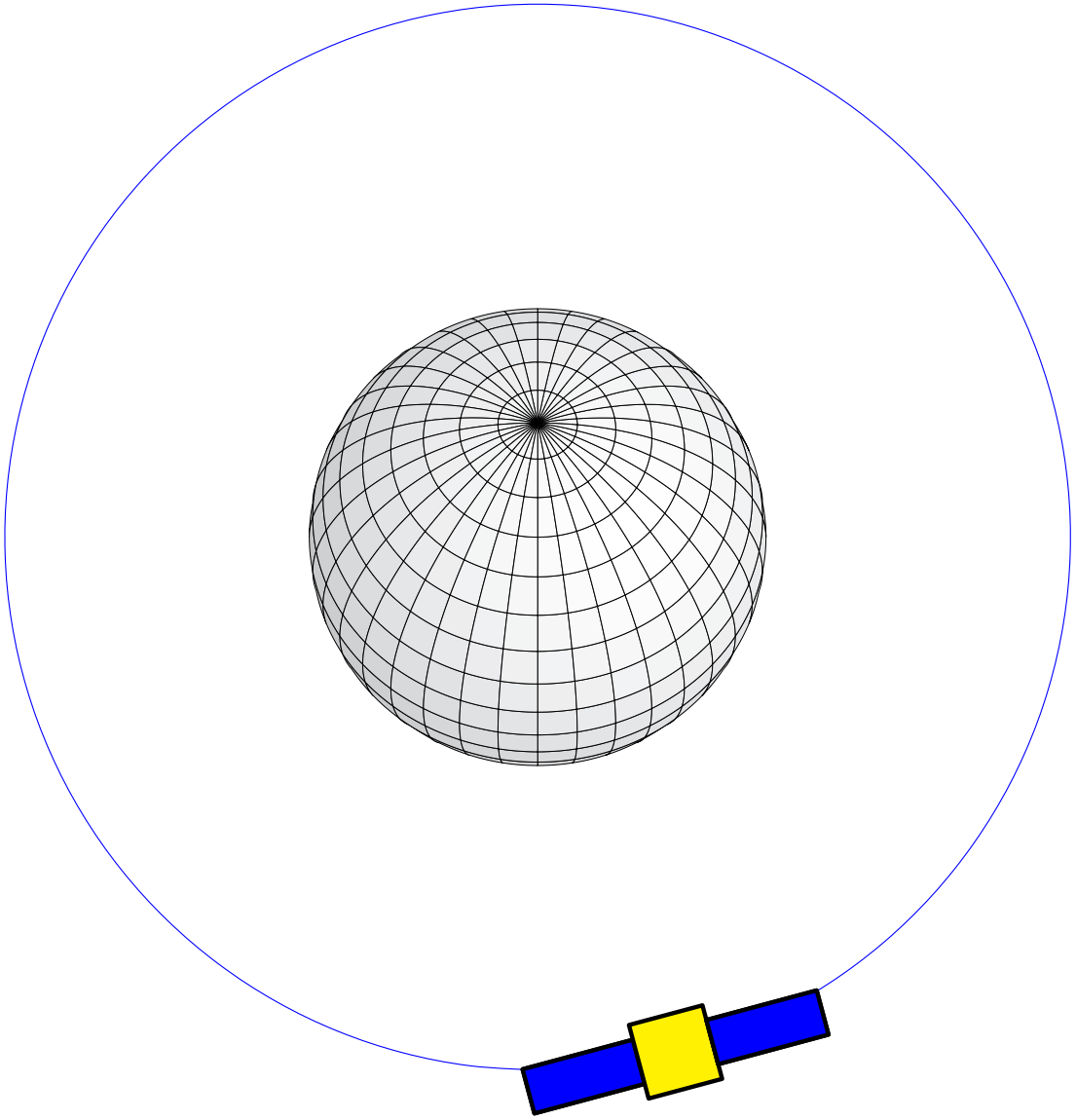

Observing the satellite from the Sun

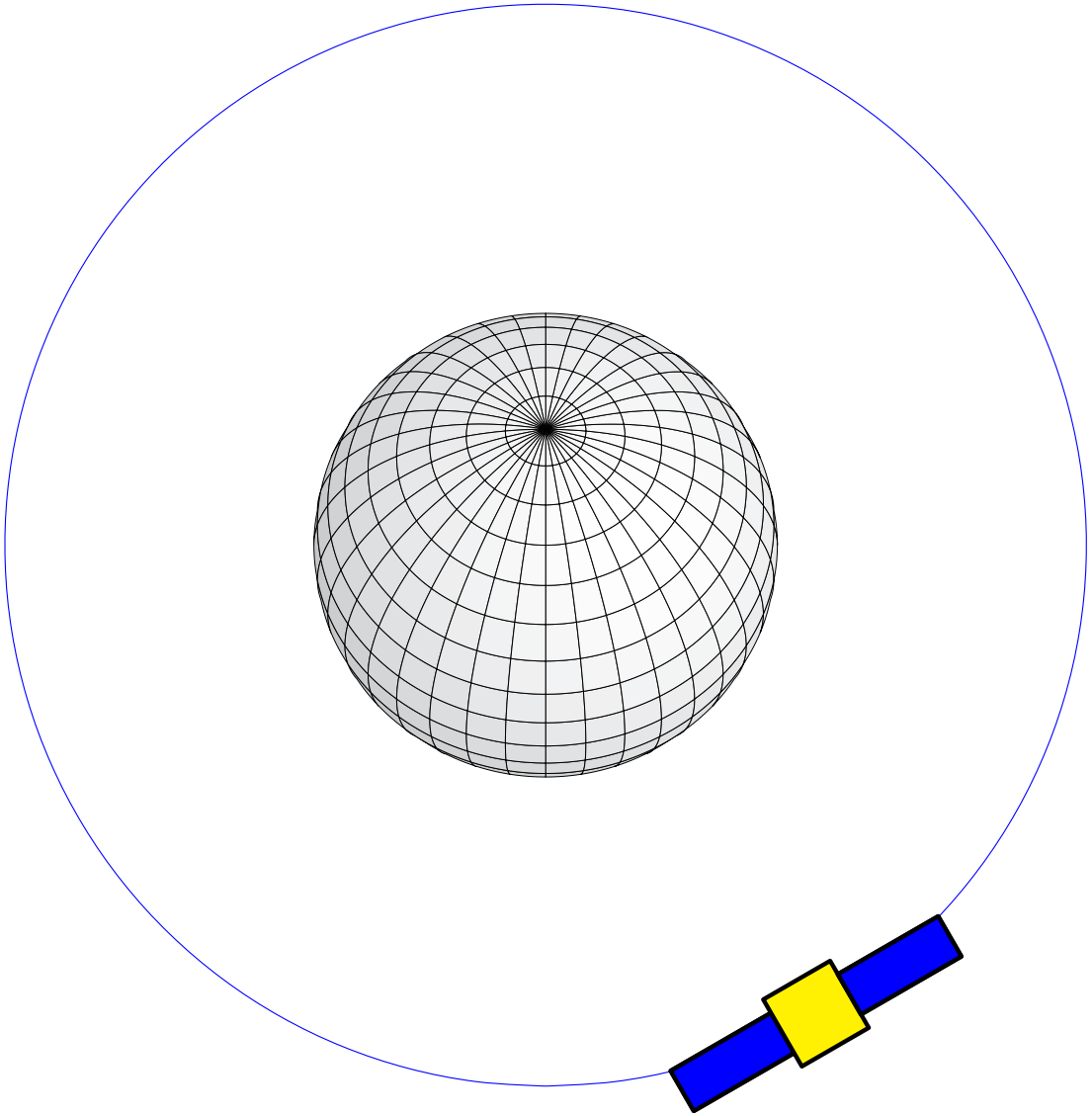

Observing the satellite from the Sun

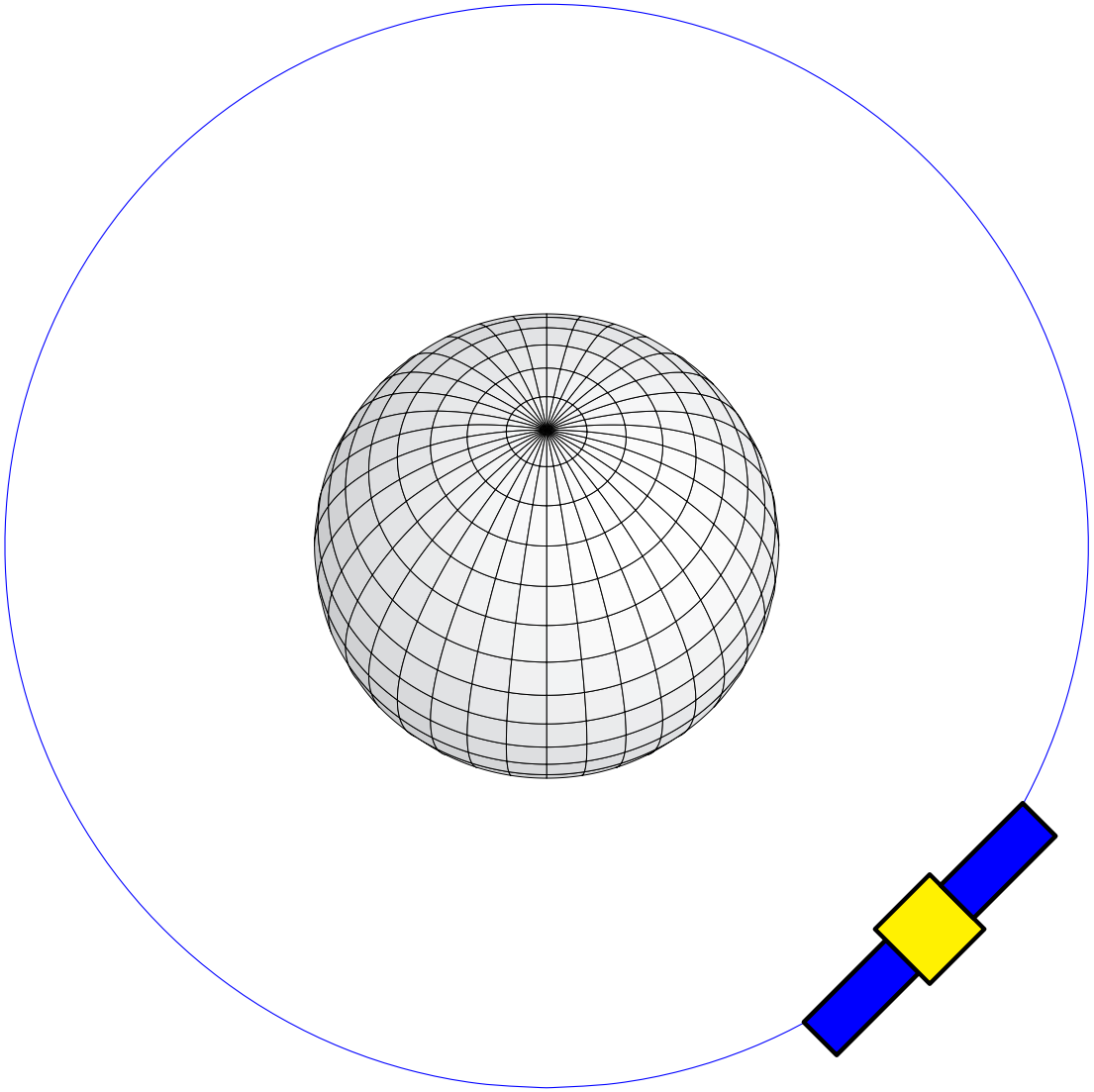

Observing the satellite from the Sun

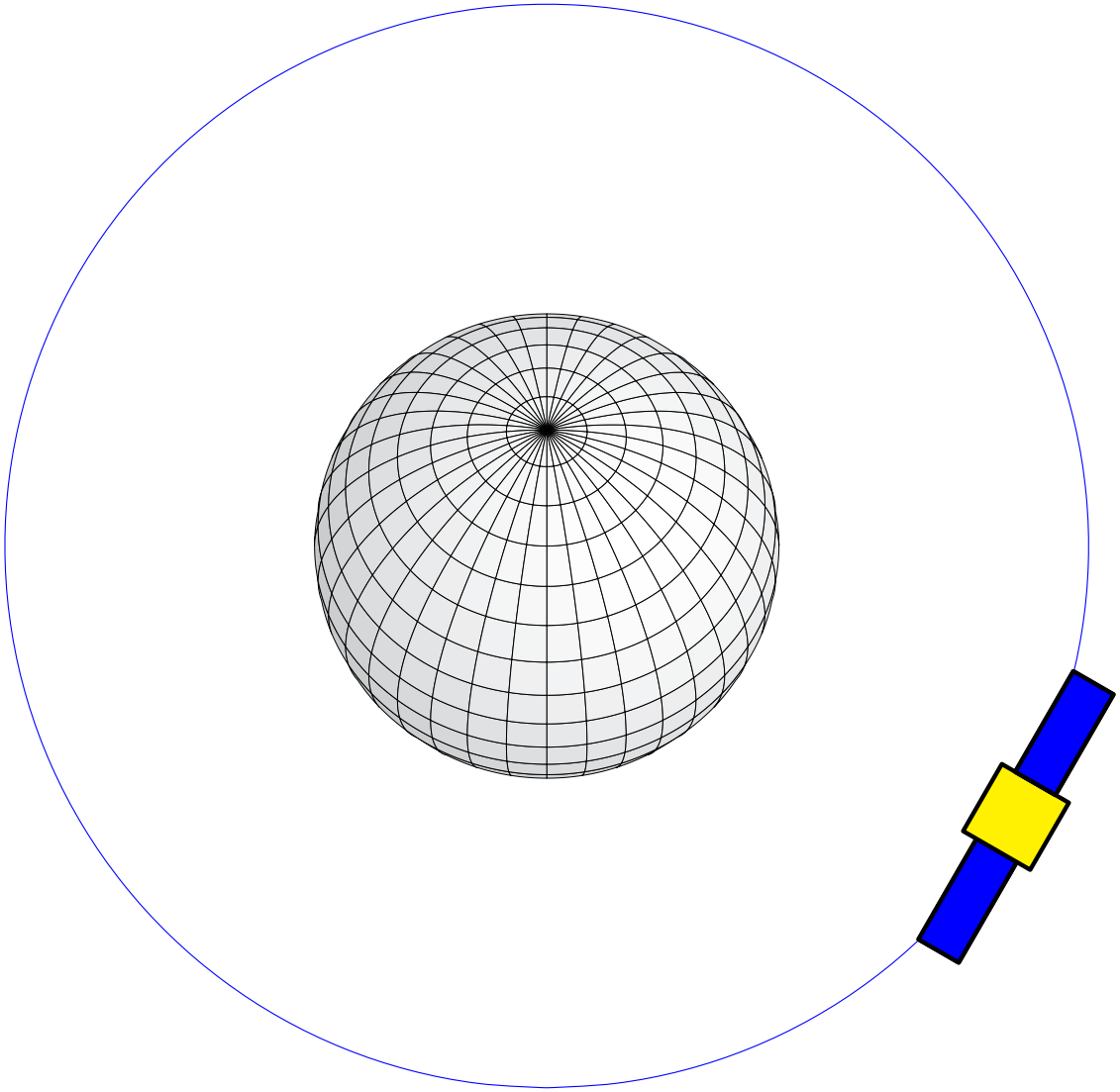

Observing the satellite from the Sun

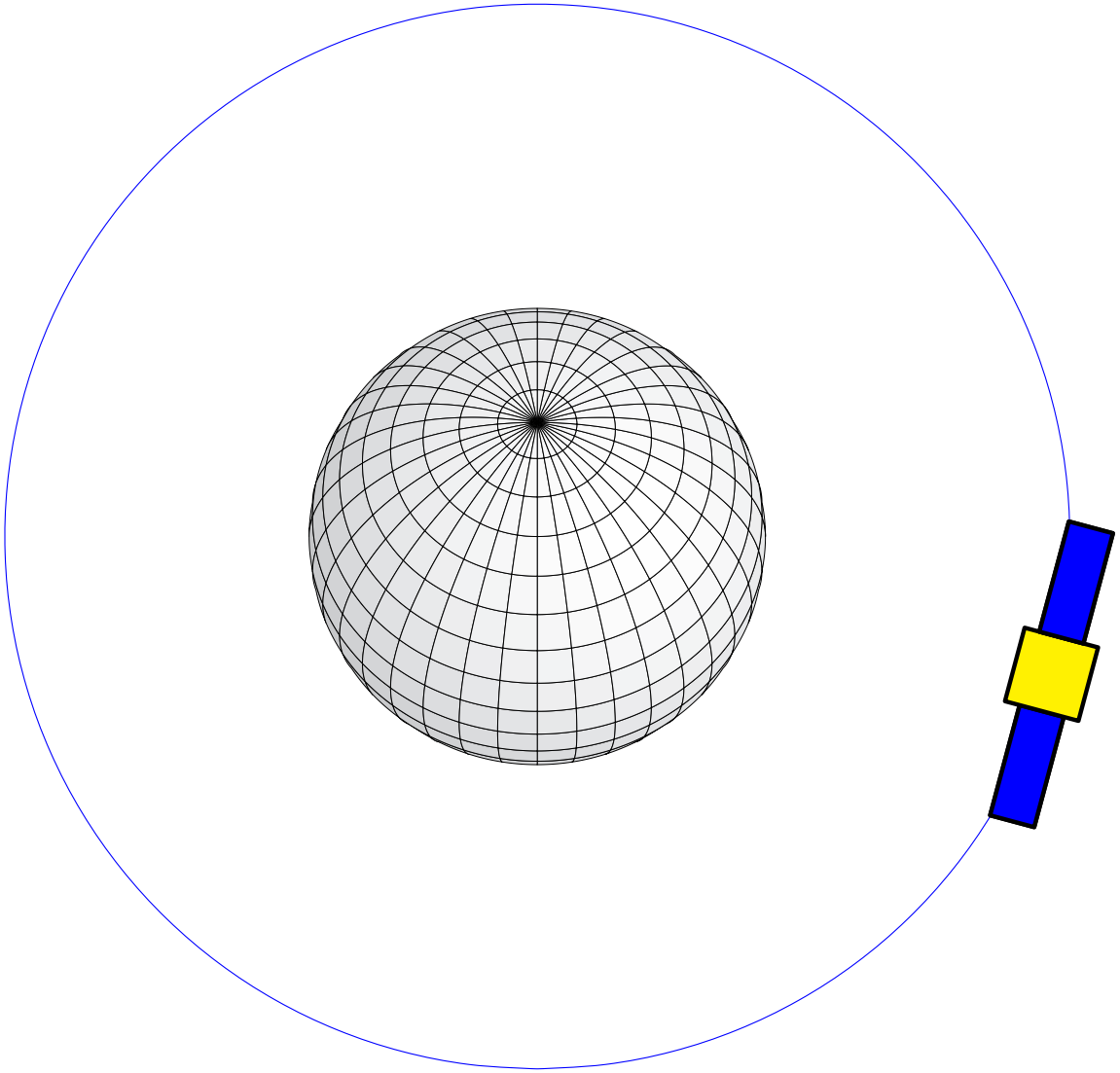

Observing the satellite from the Sun

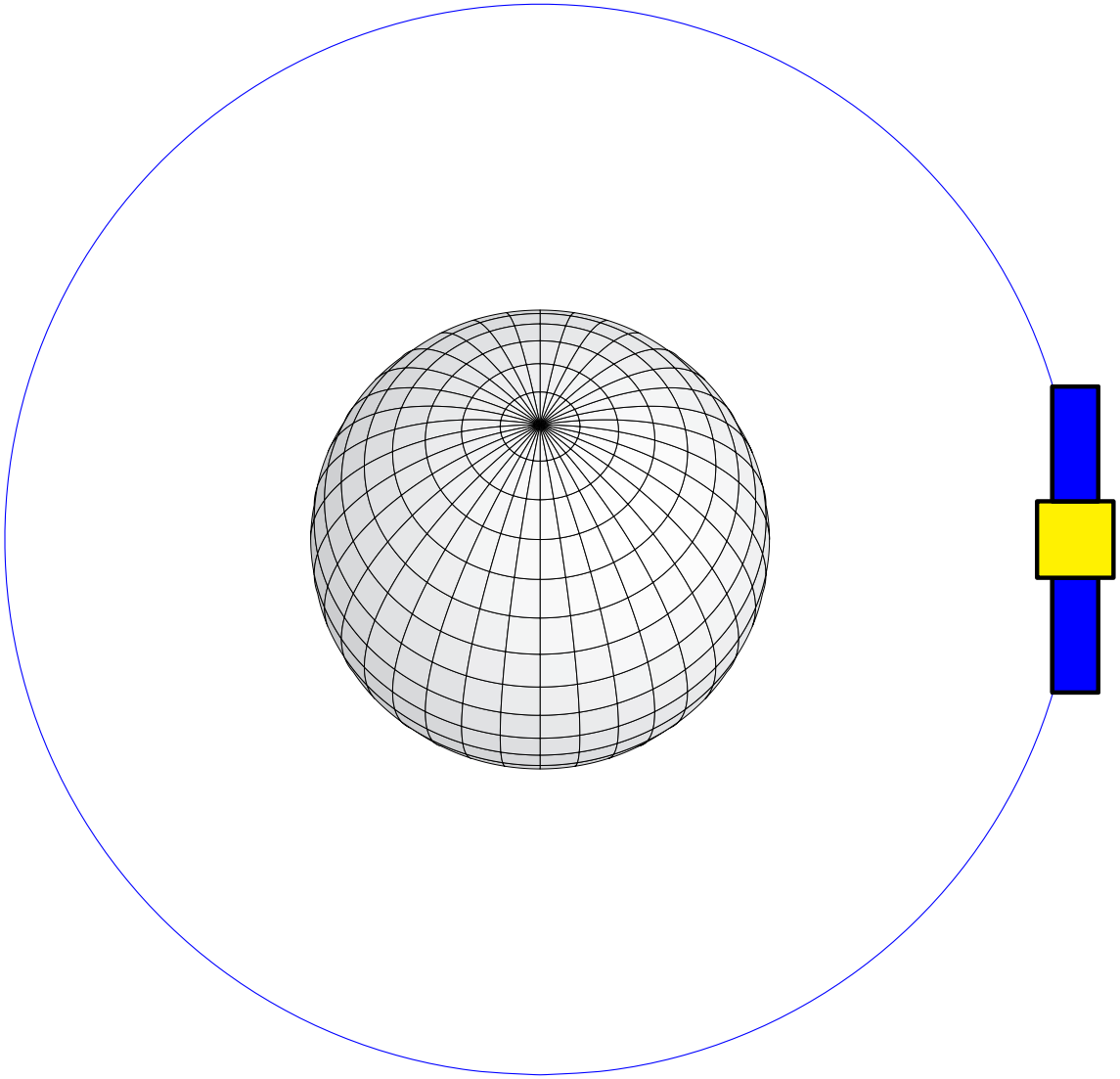

Observing the satellite from the Sun

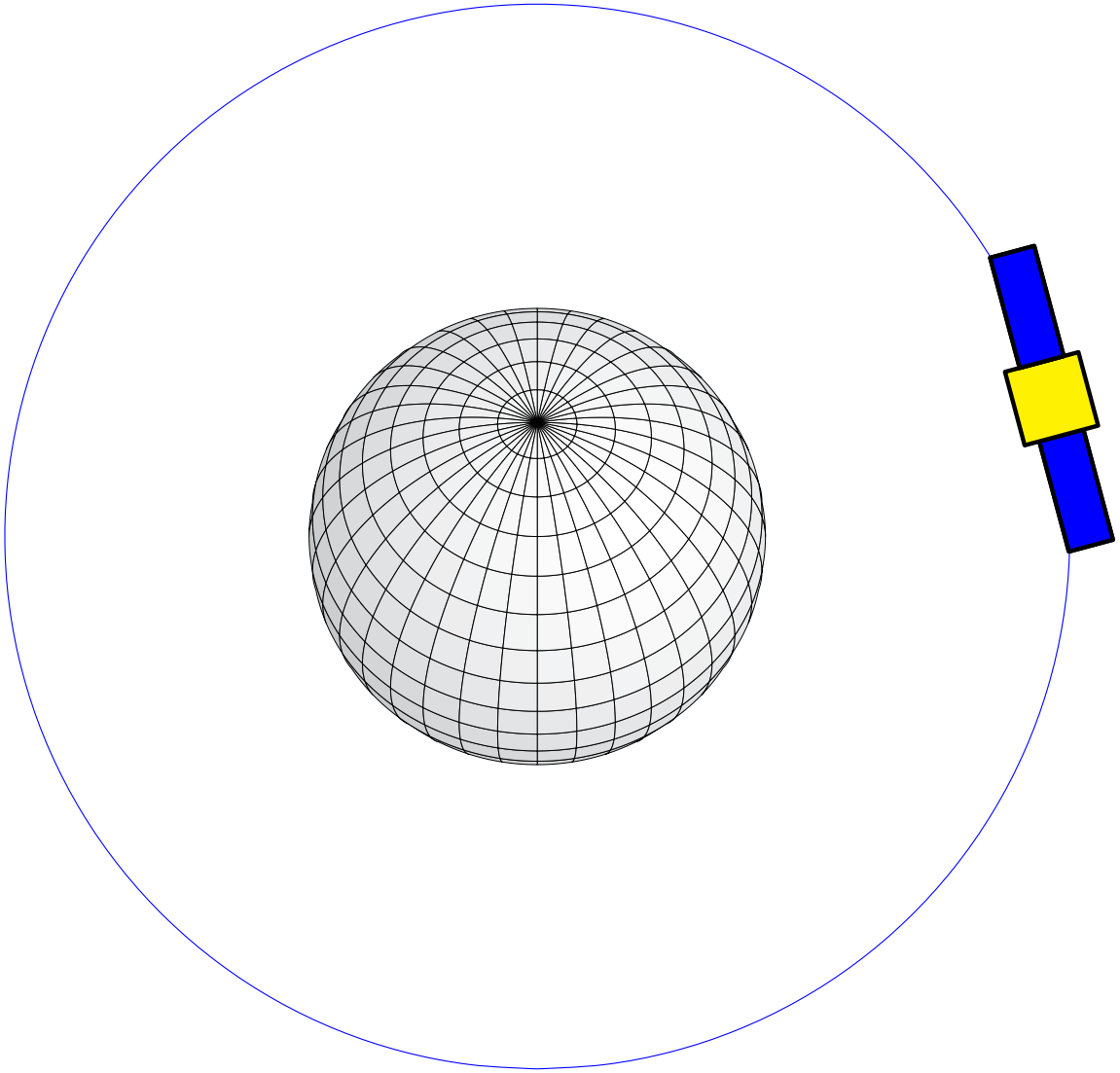

Observing the satellite from the Sun

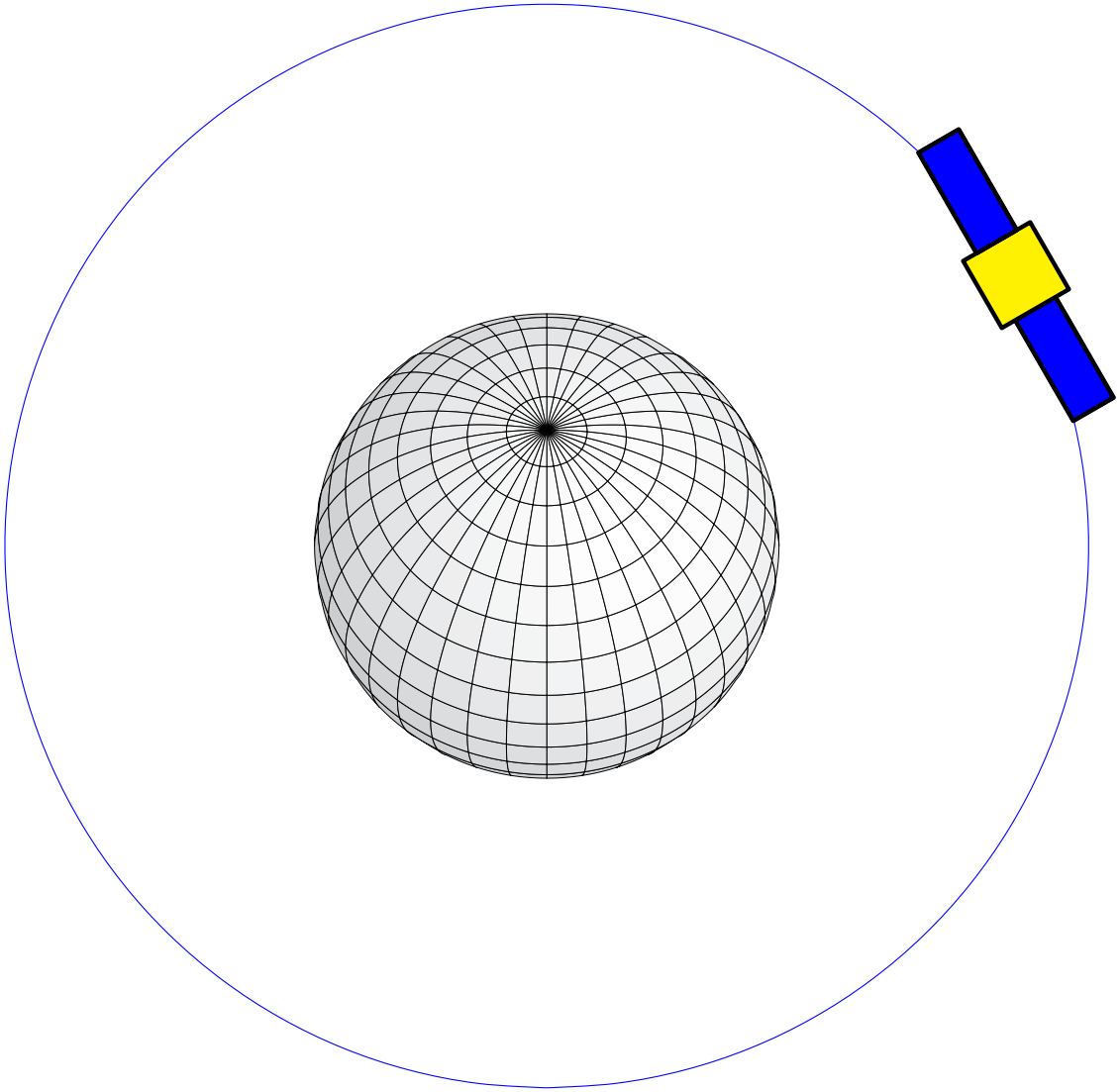

Observing the satellite from the Sun

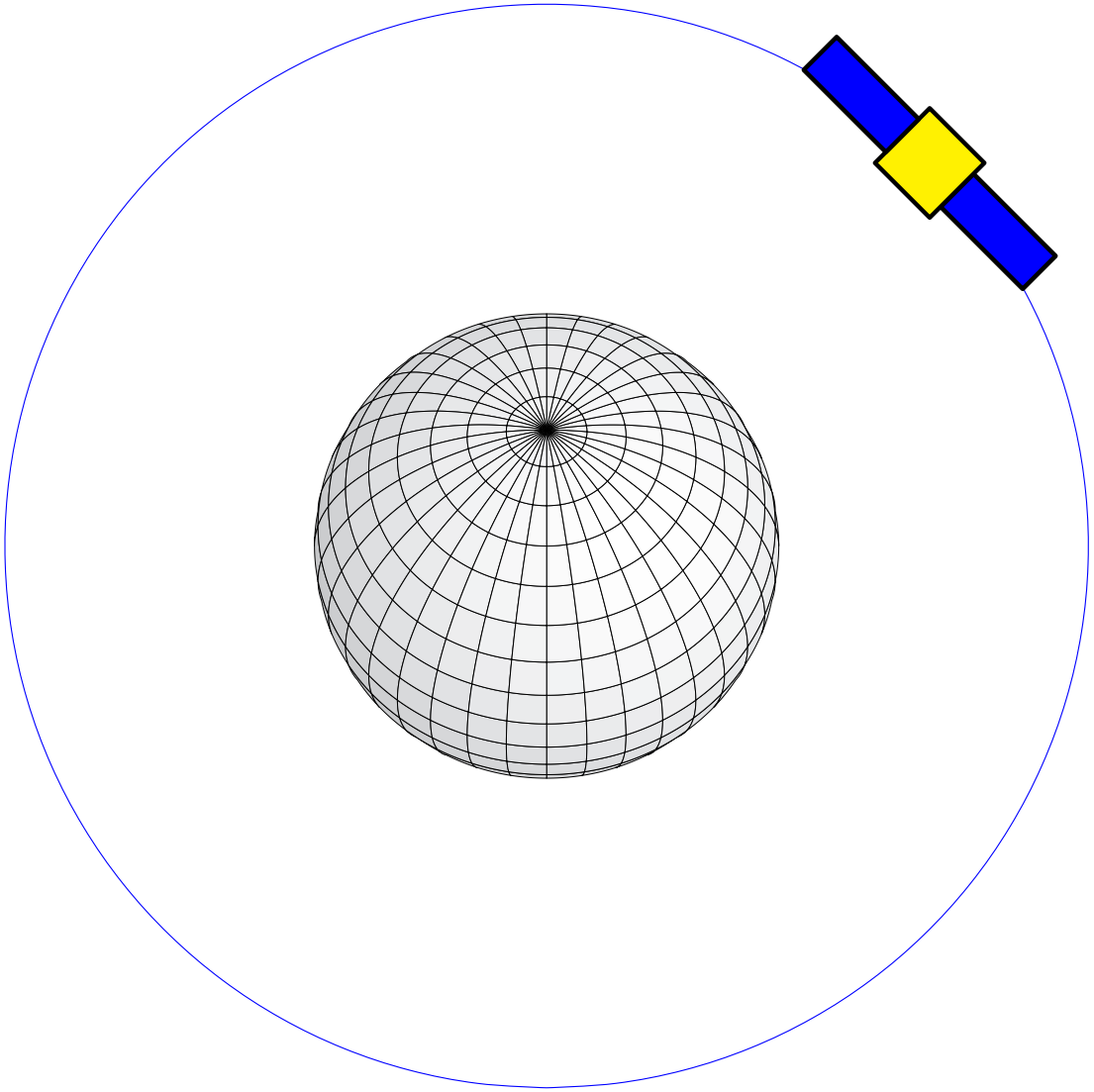

Observing the satellite from the Sun

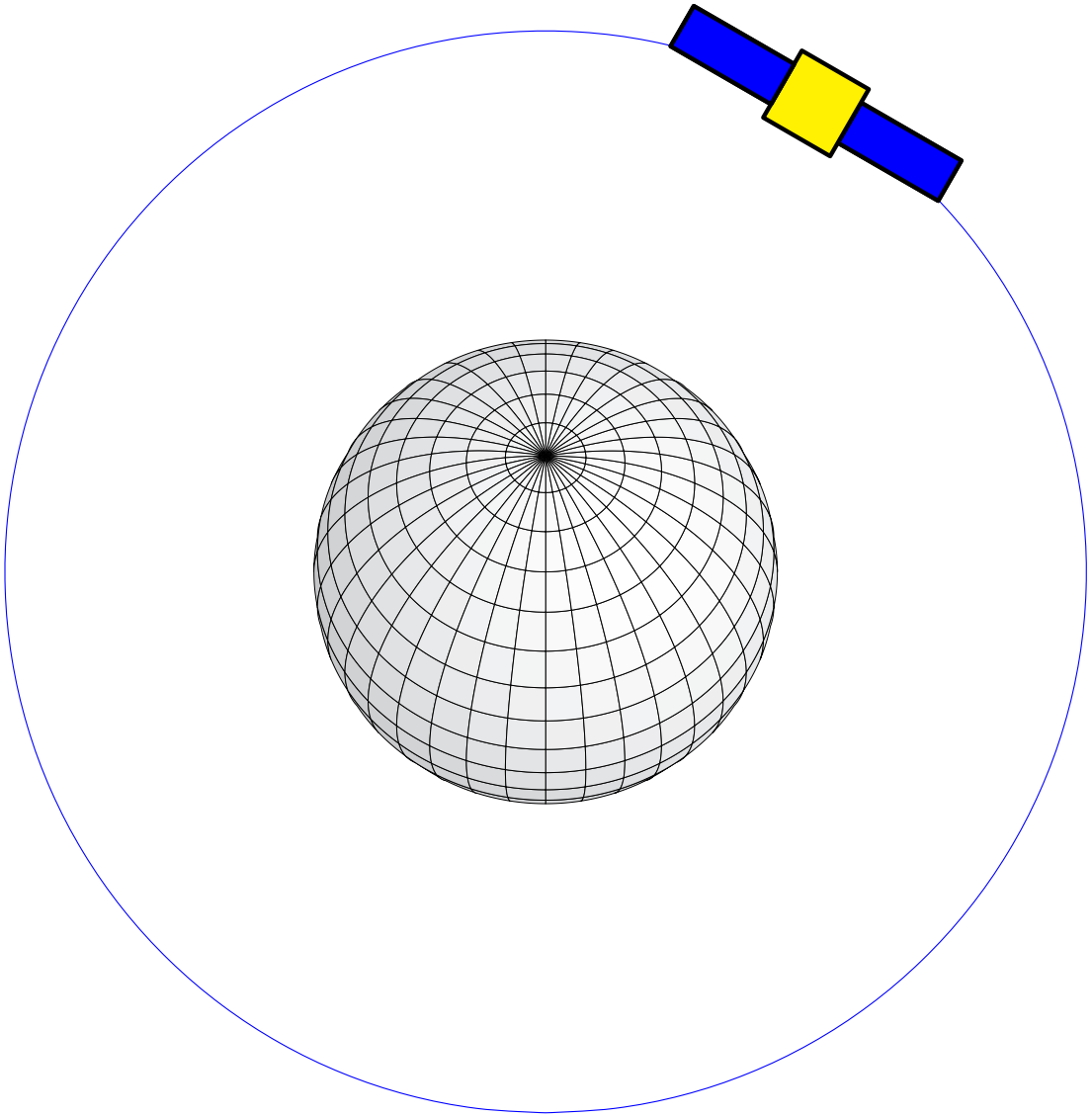

Observing the satellite from the Sun

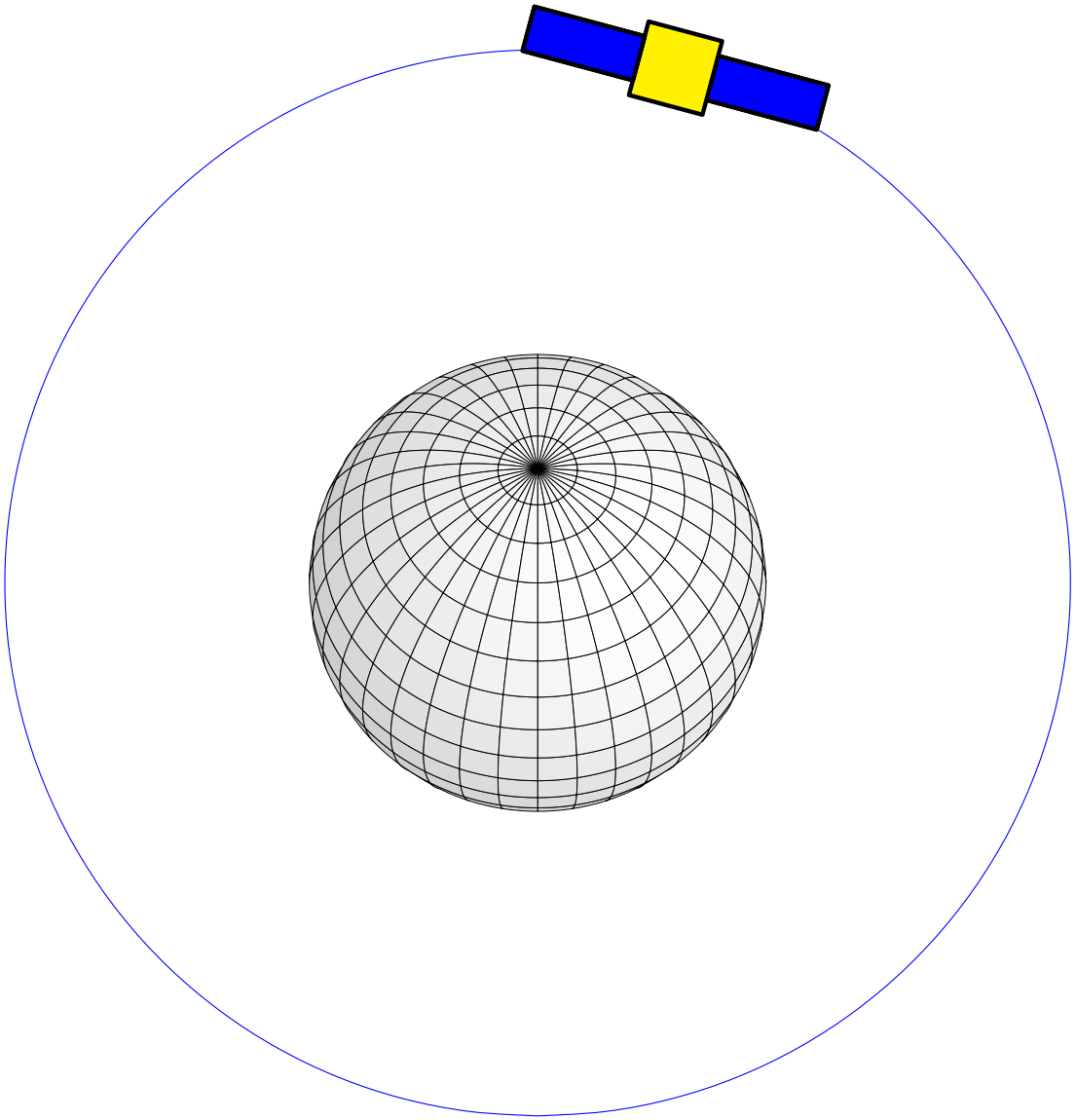

Observing the satellite from the Sun

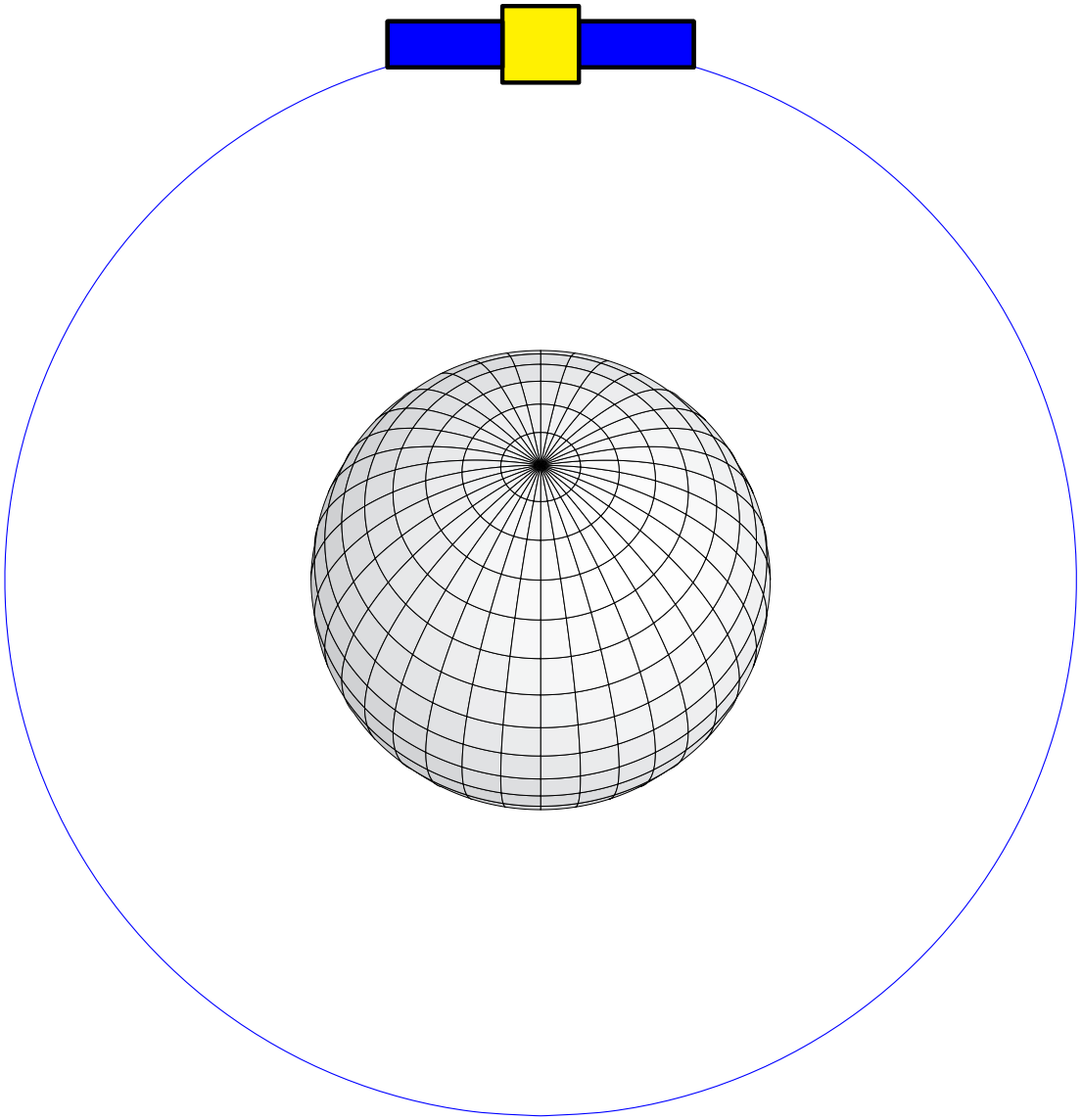

Observing the satellite from the Sun

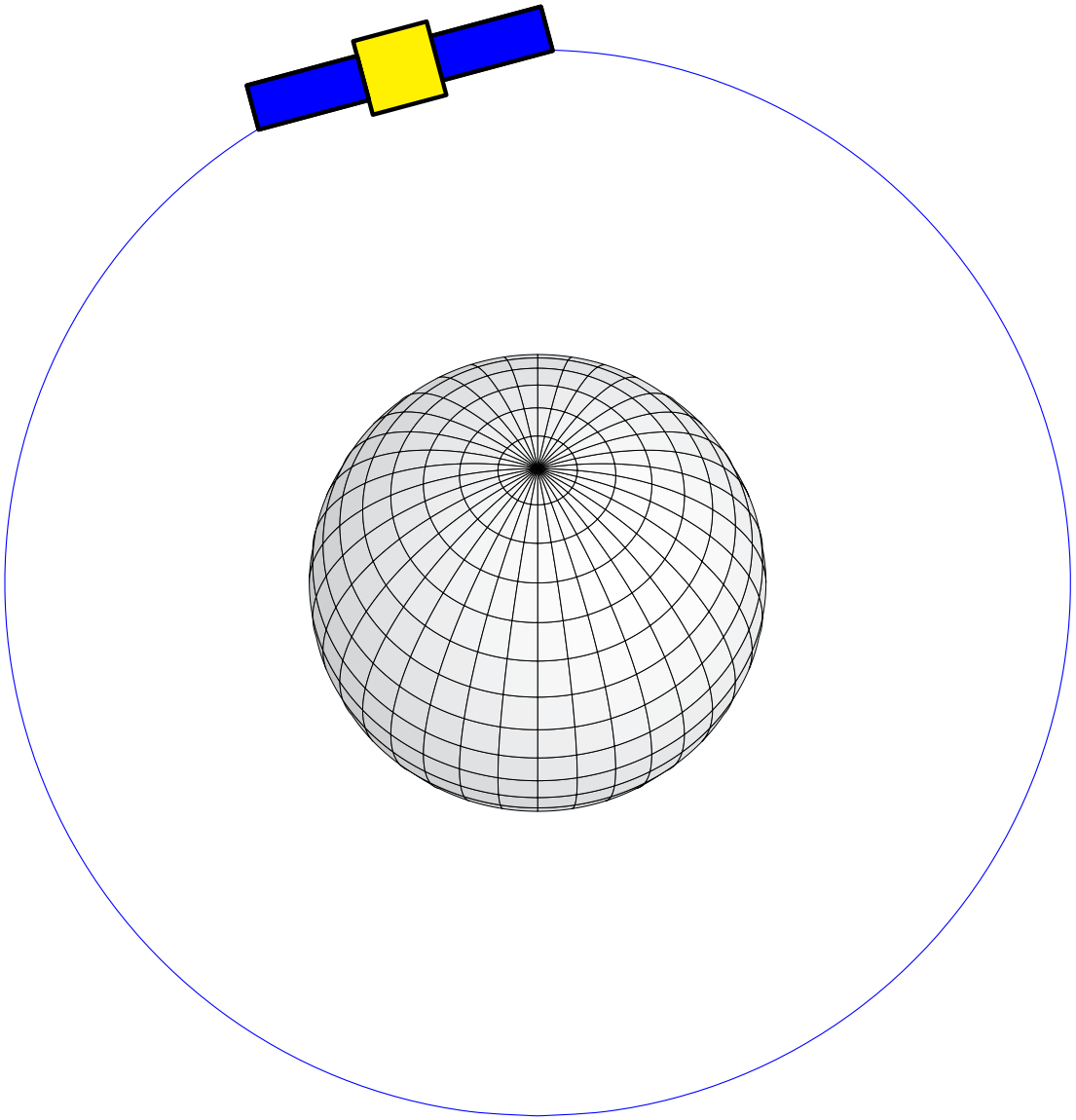

Observing the satellite from the Sun

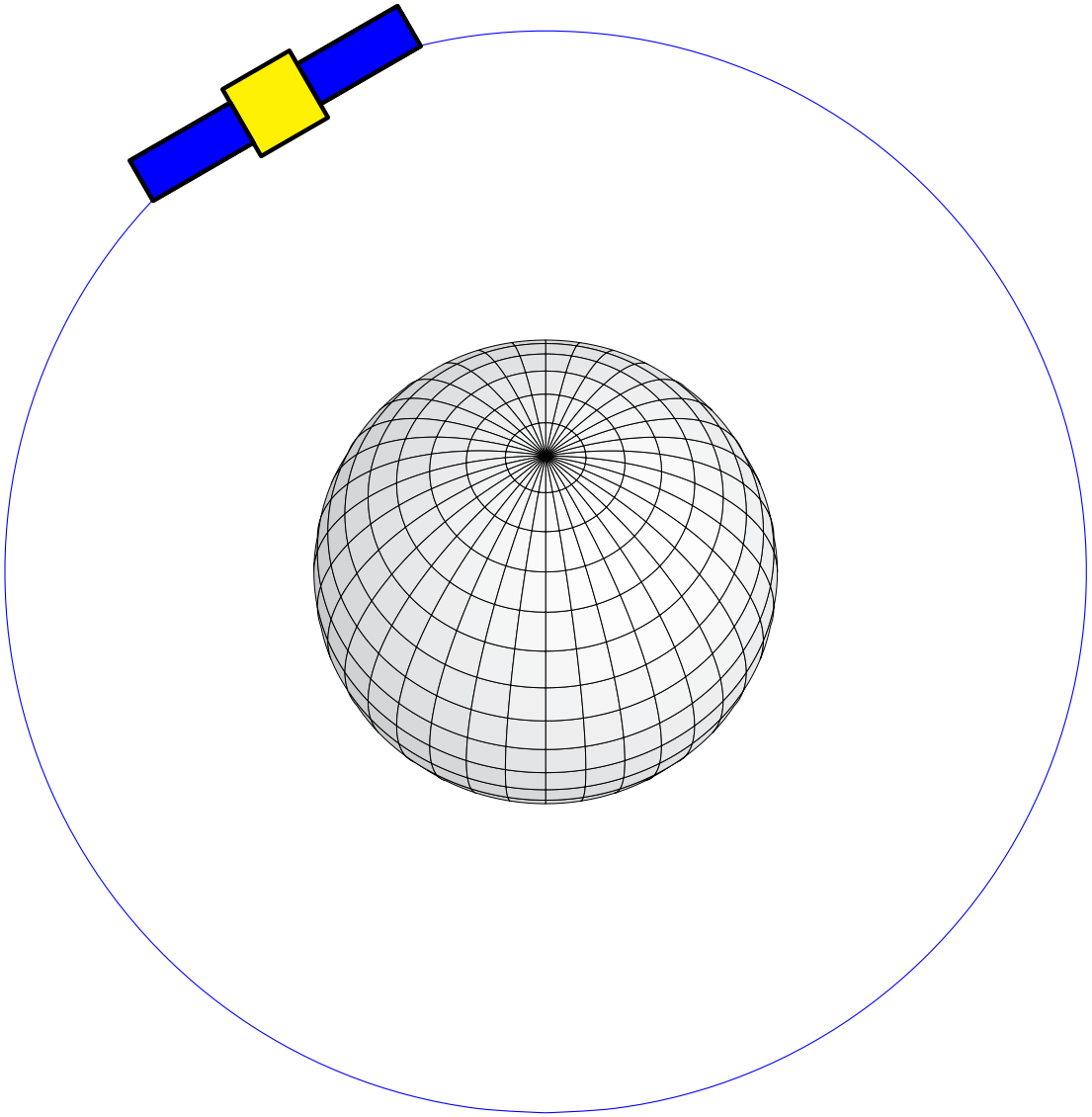

Observing the satellite from the Sun

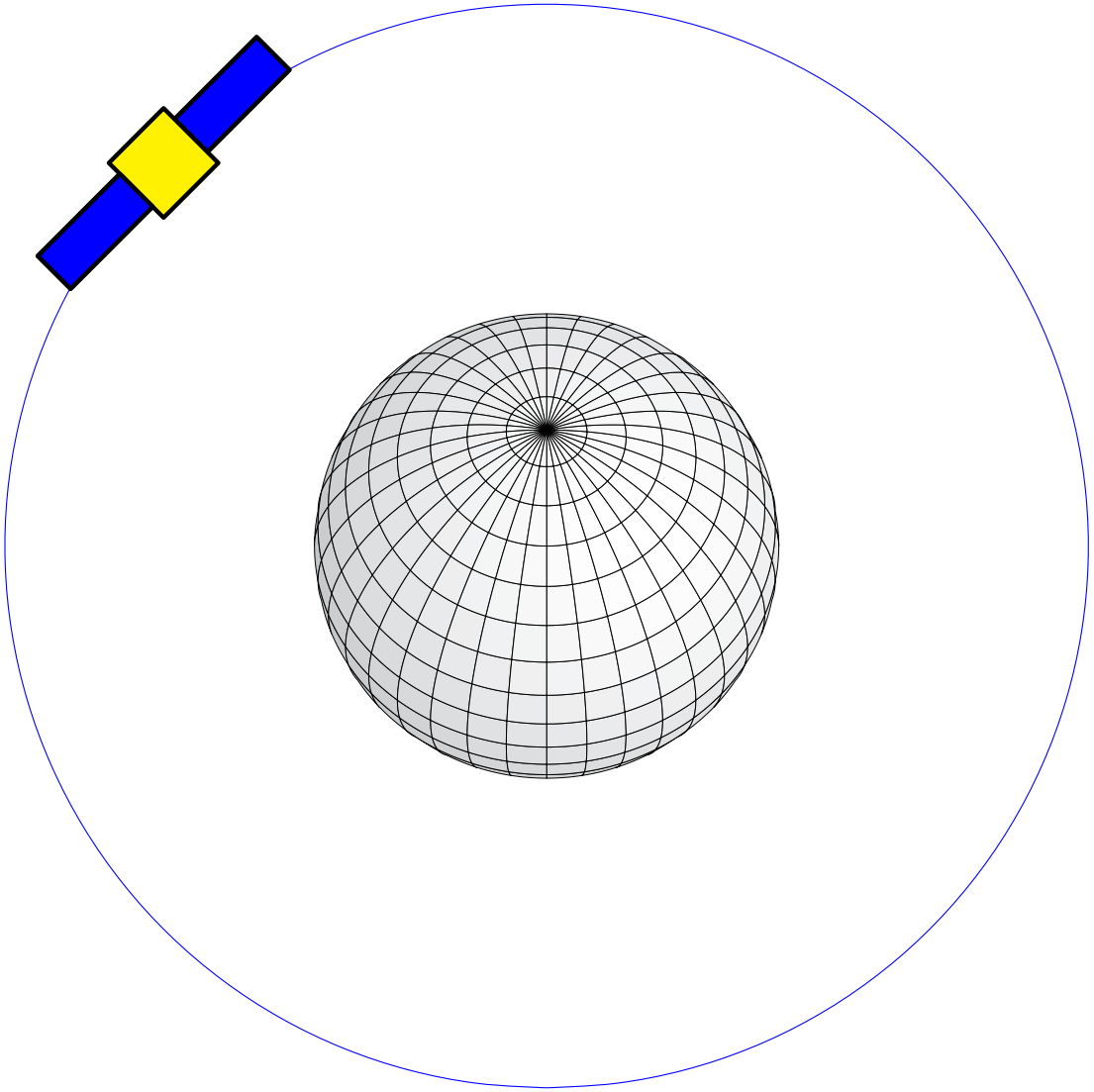

Observing the satellite from the Sun

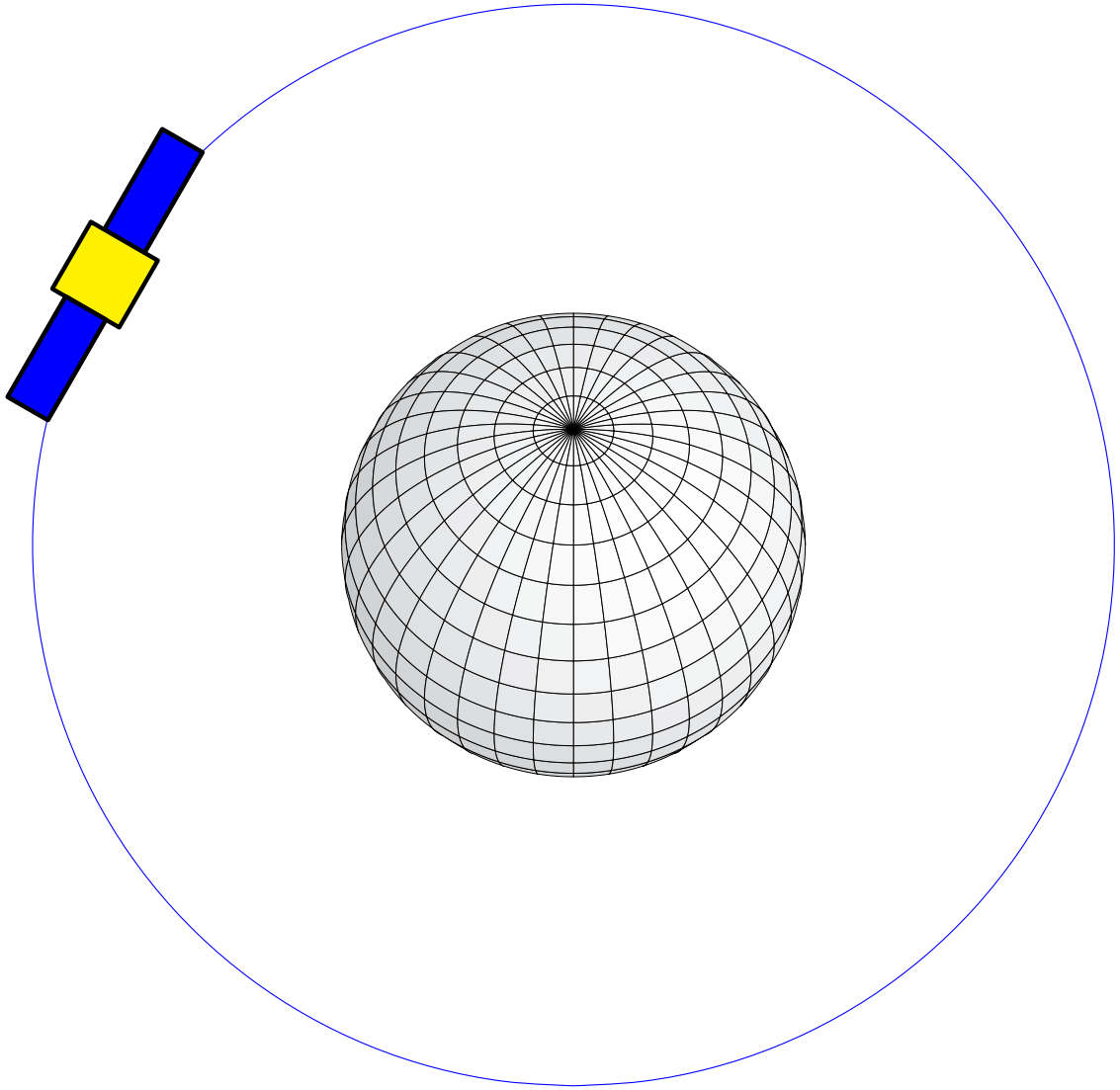

Observing the satellite from the Sun

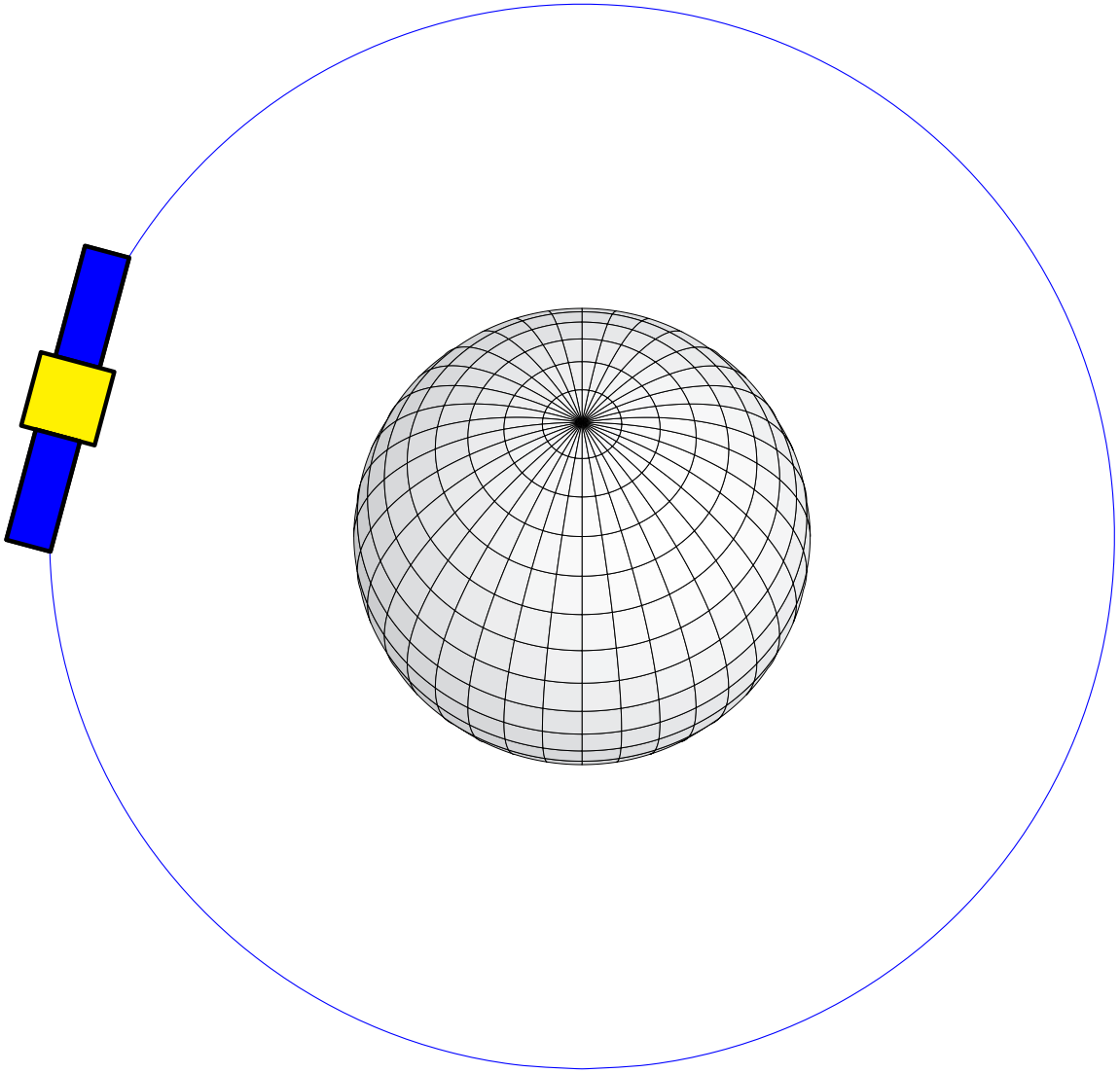

Observing the satellite from the Sun

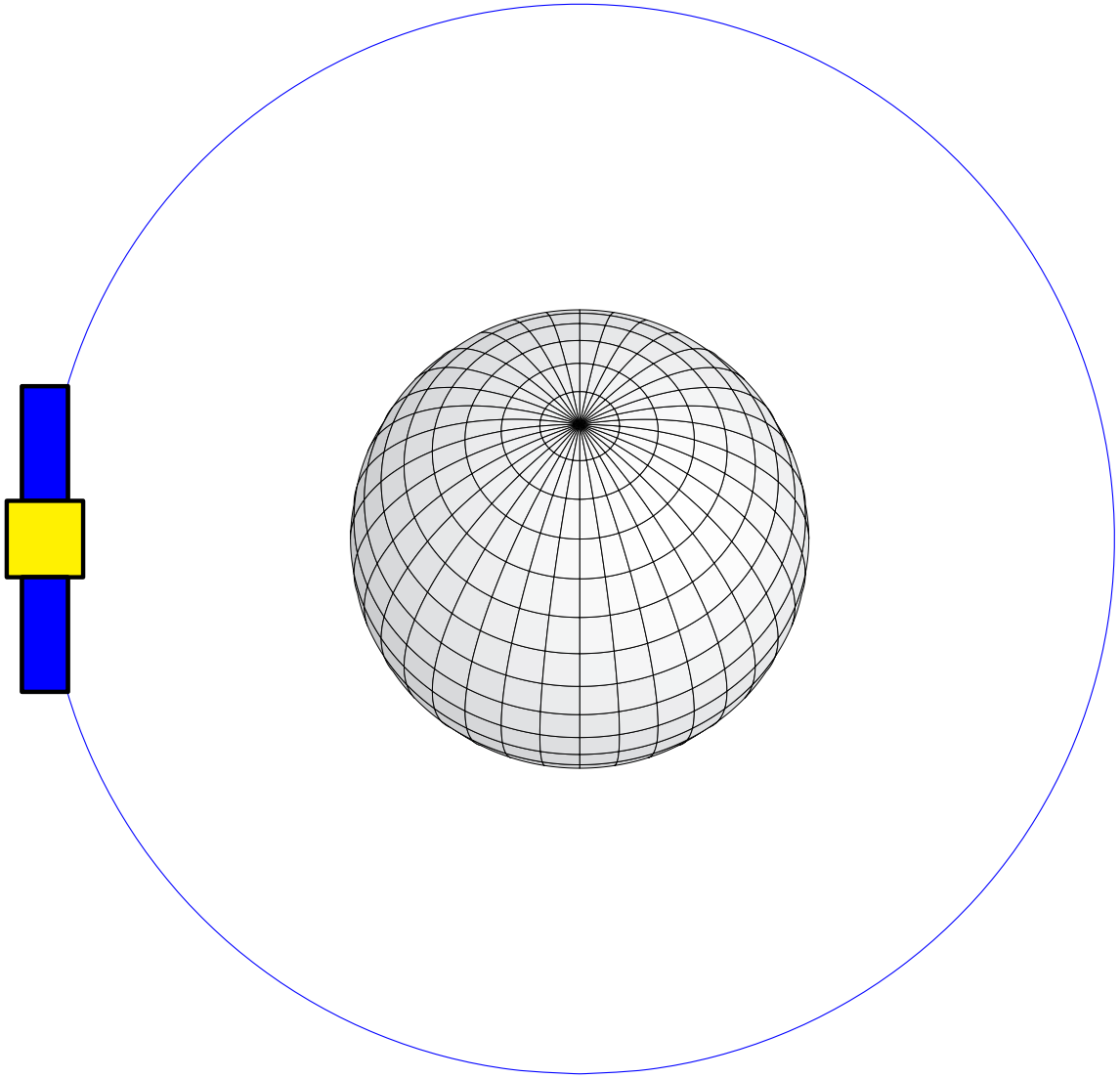

Observing the satellite from the Sun

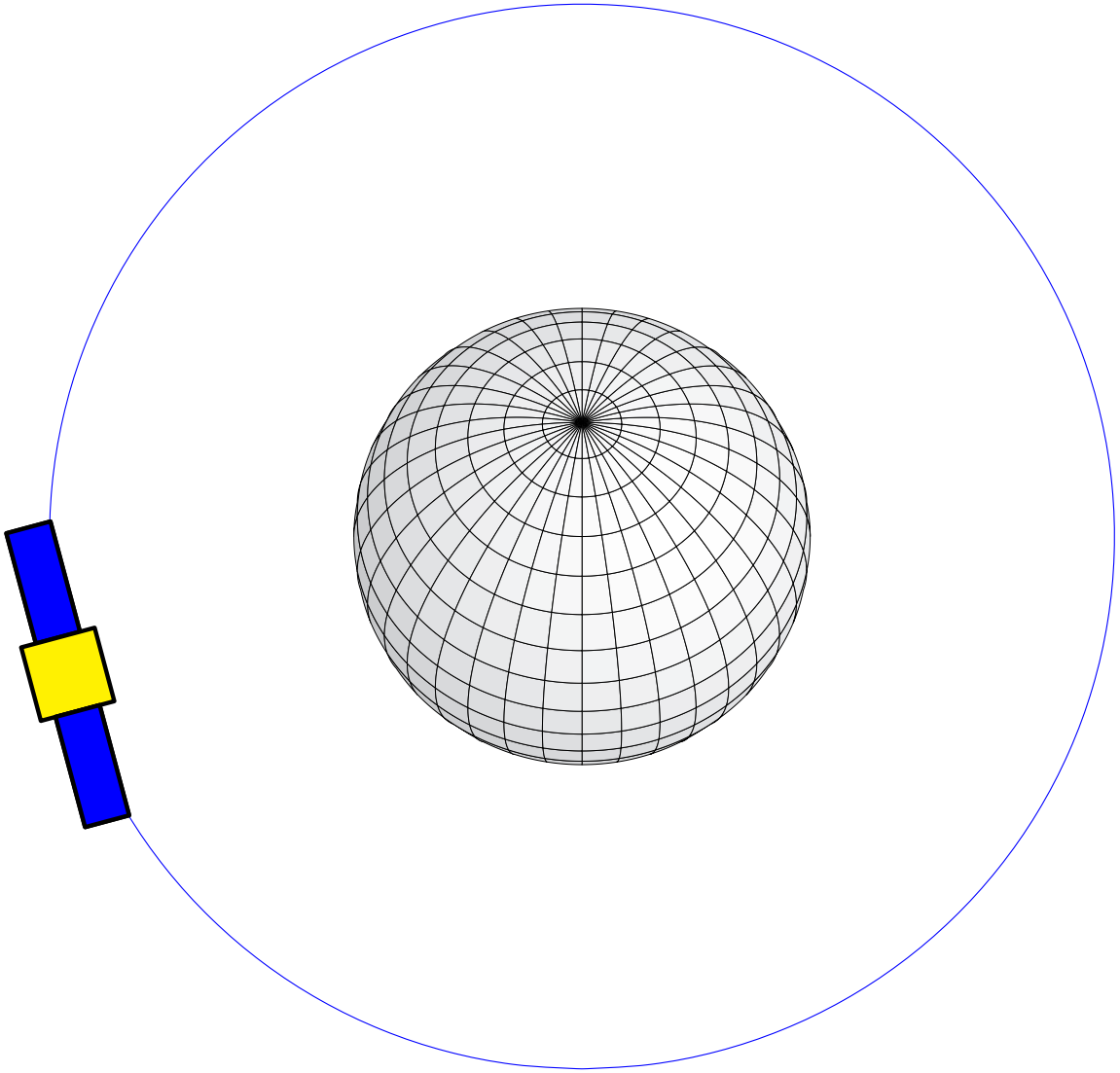

Observing the satellite from the Sun

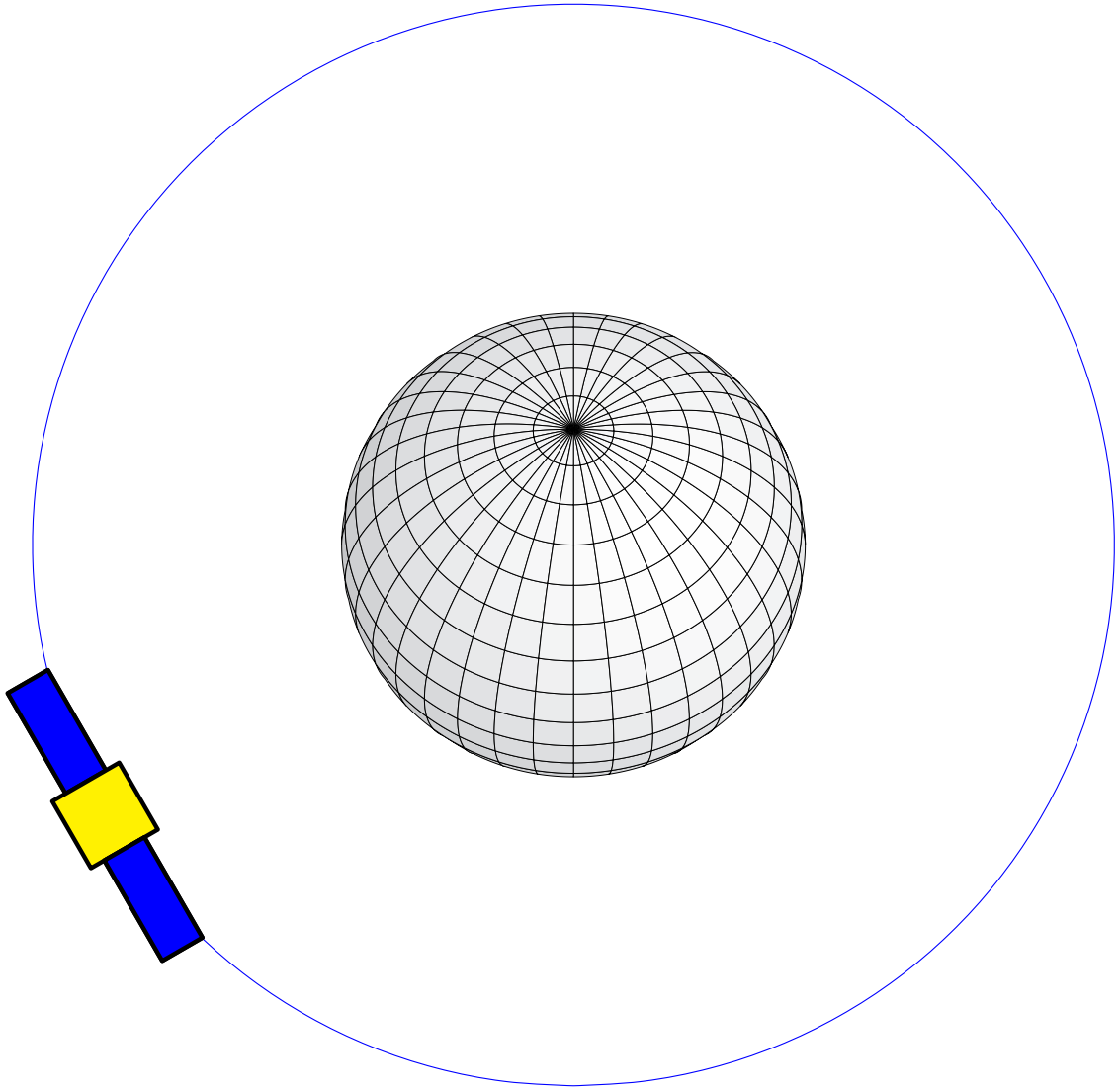

Observing the satellite from the Sun

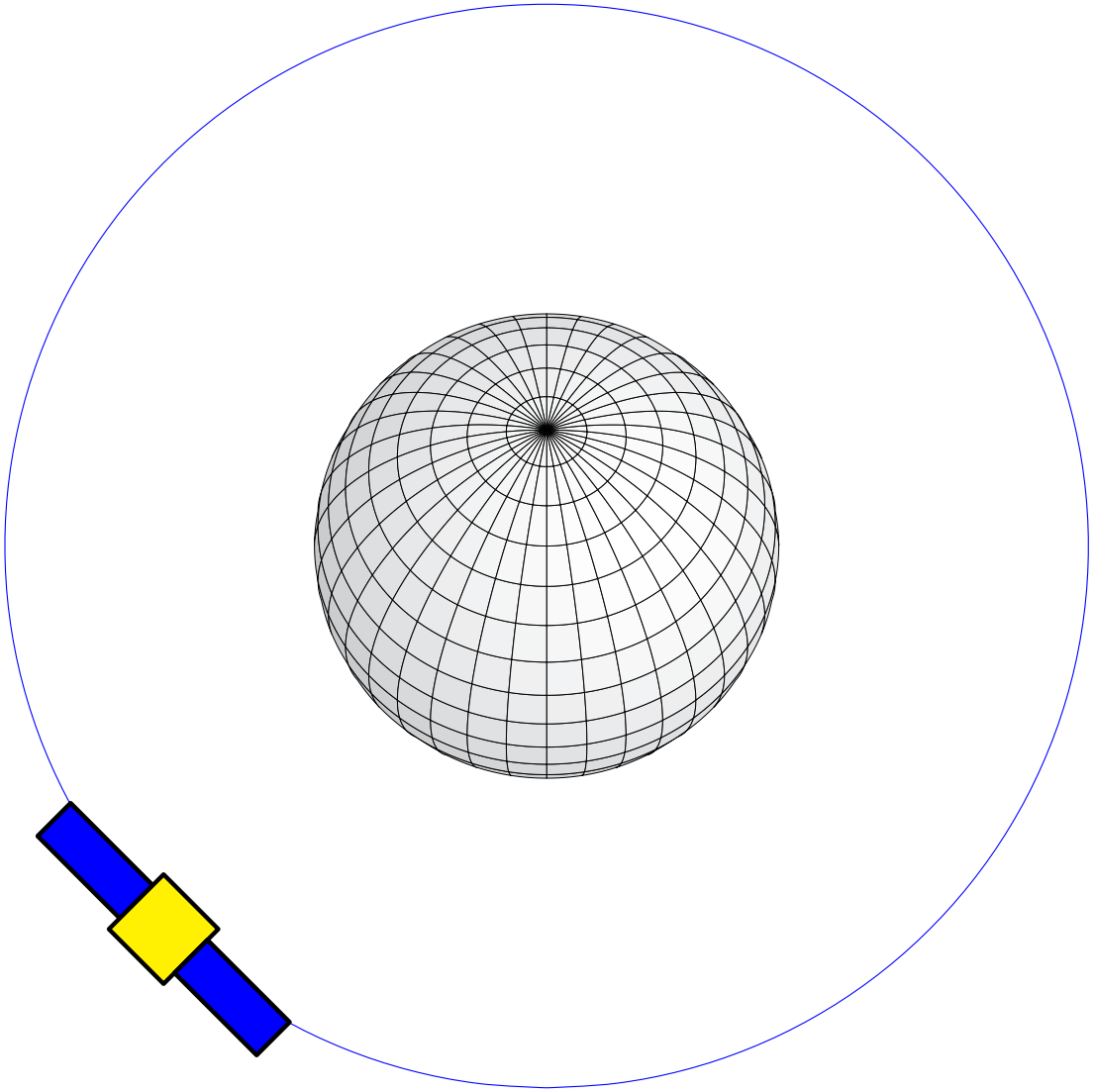

Observing the satellite from the Sun

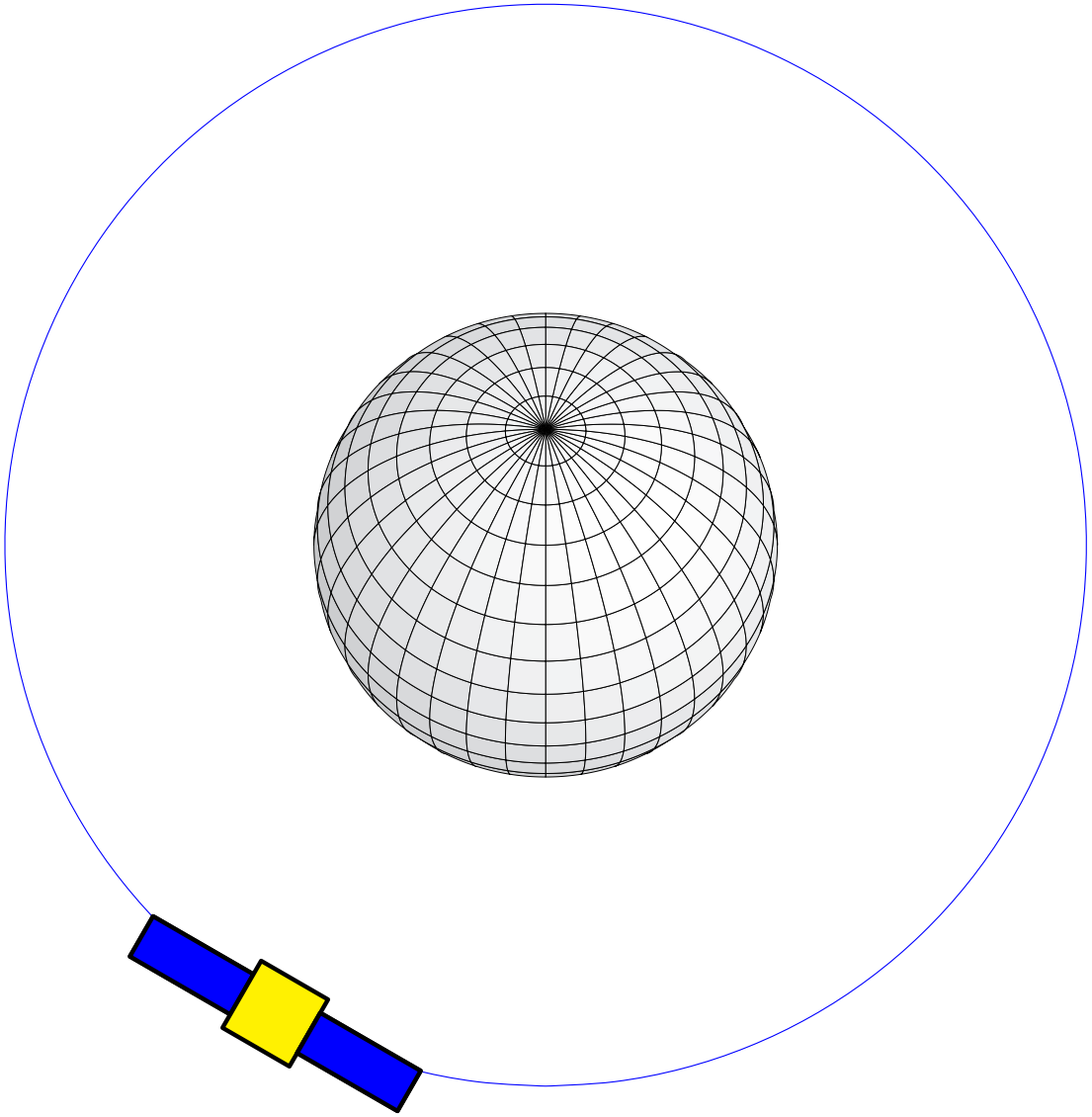

Observing the satellite from the Sun

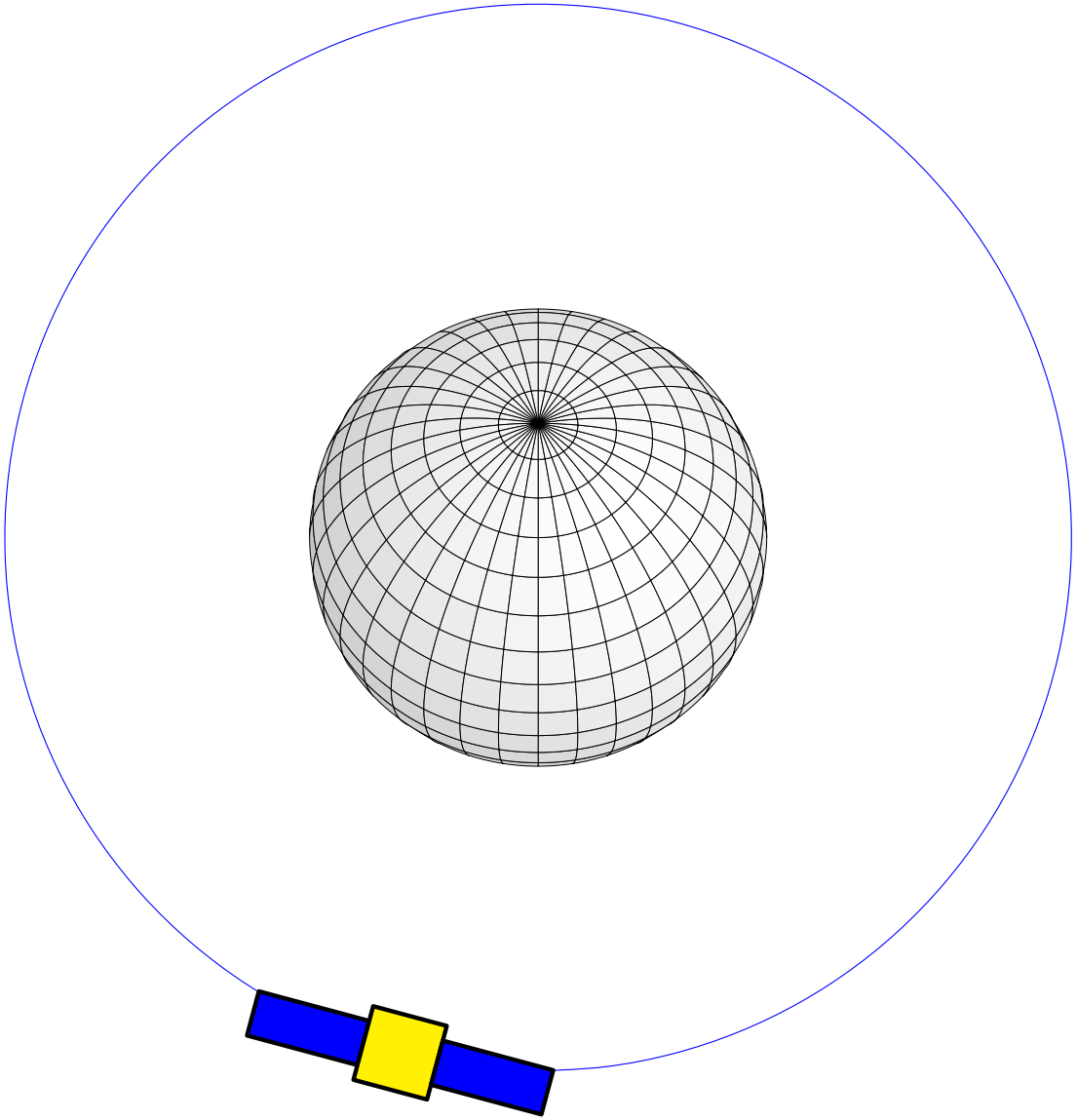

Observing the satellite from the Sun

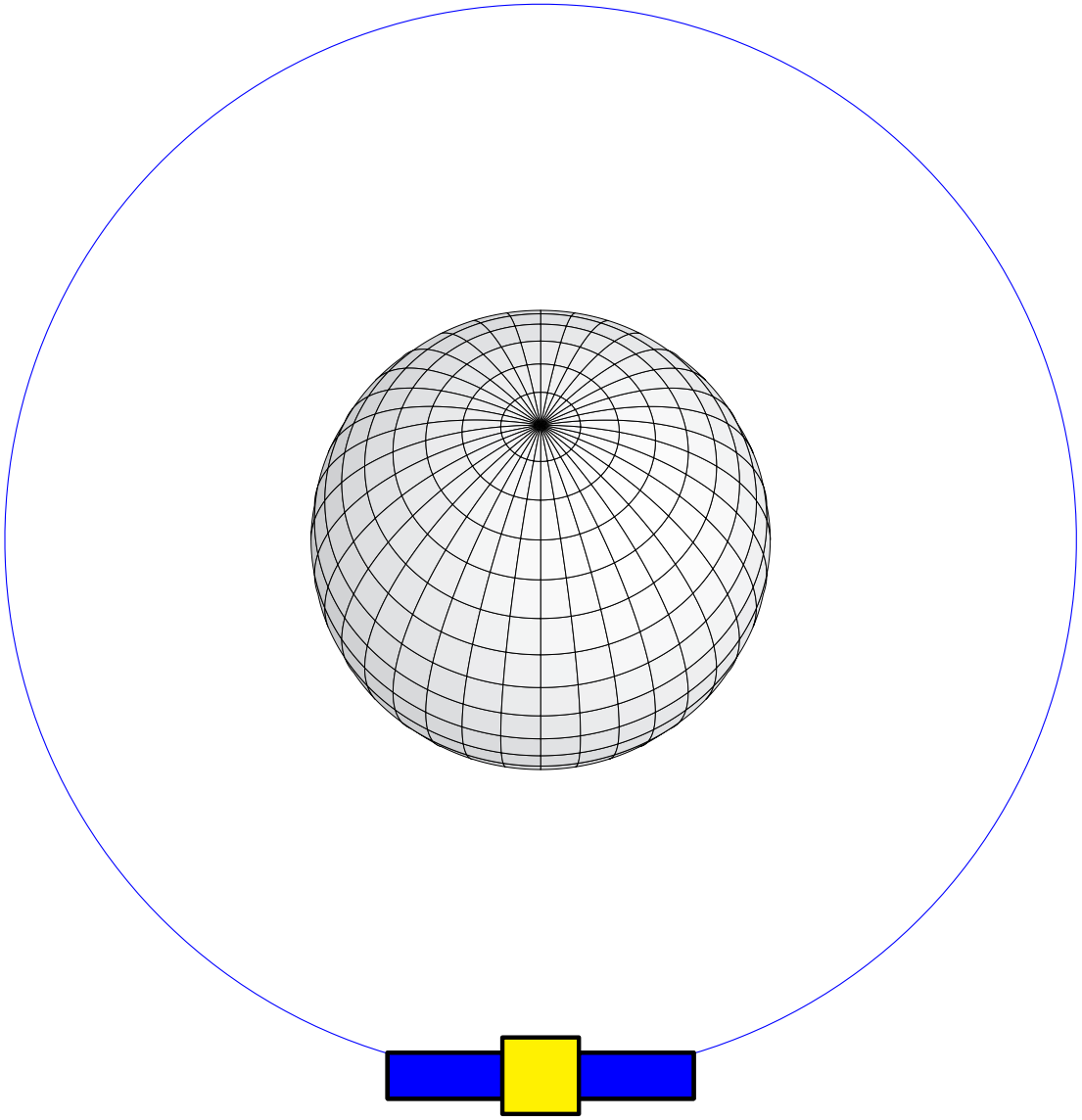

Observing the satellite from the Sun

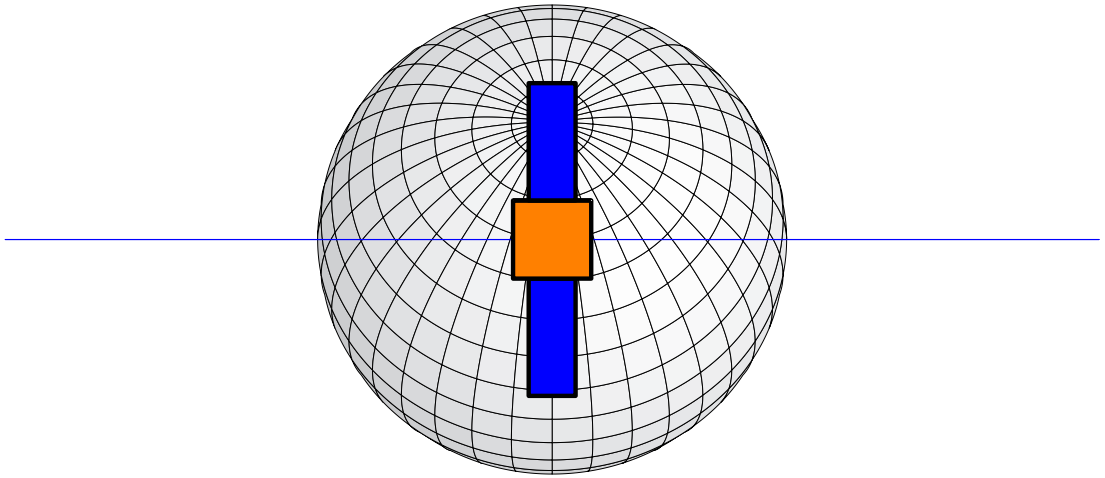

Observing the satellite from the Sun

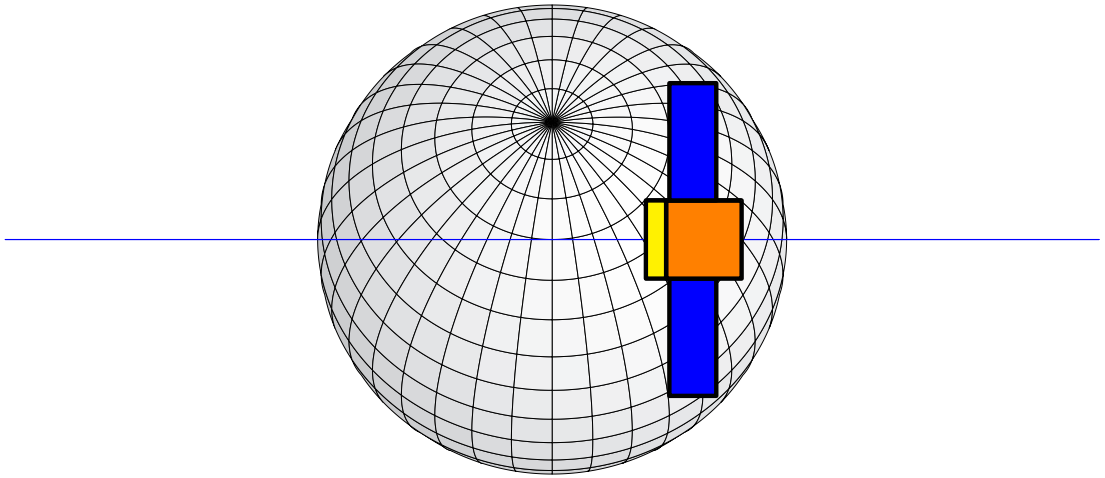

Observing the satellite from the Sun

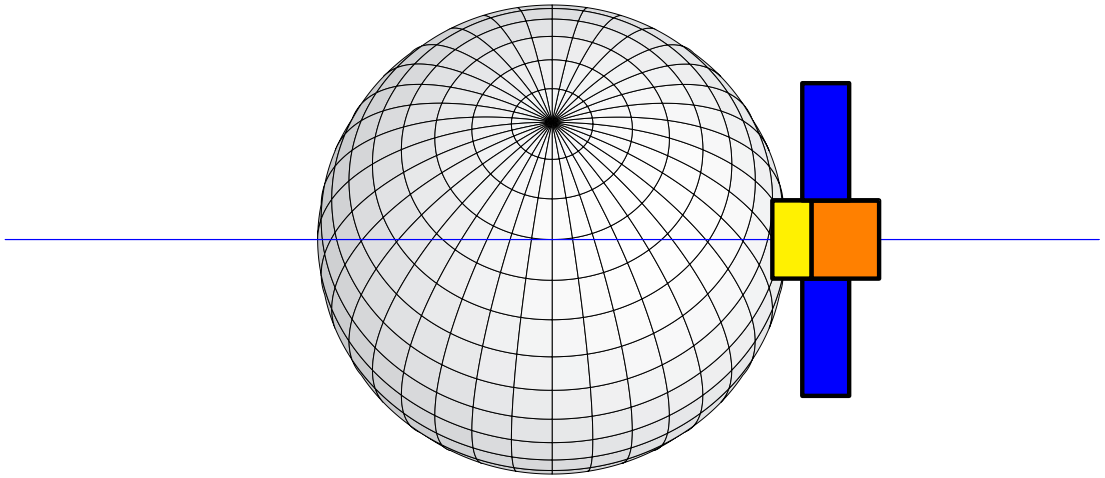

Observing the satellite from the Sun

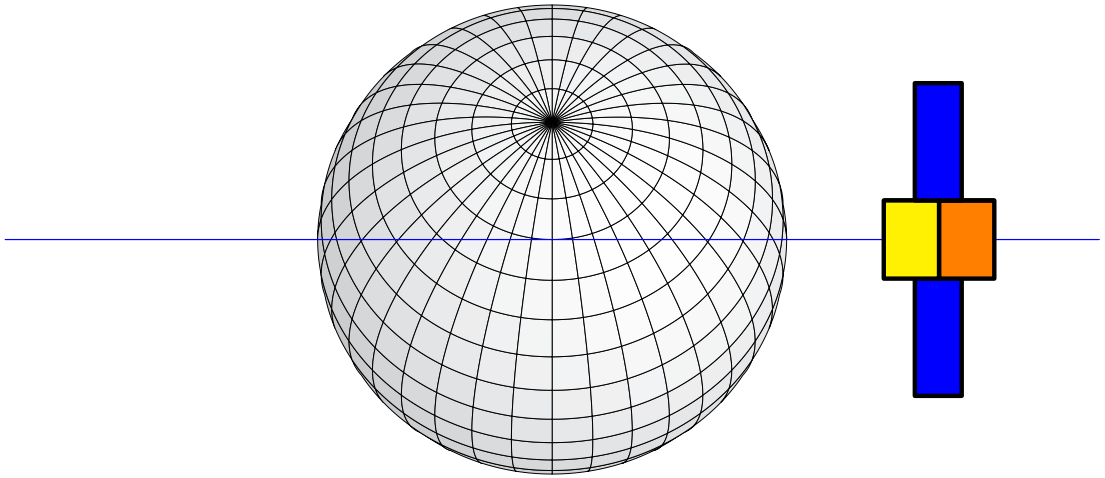

Observing the satellite from the Sun

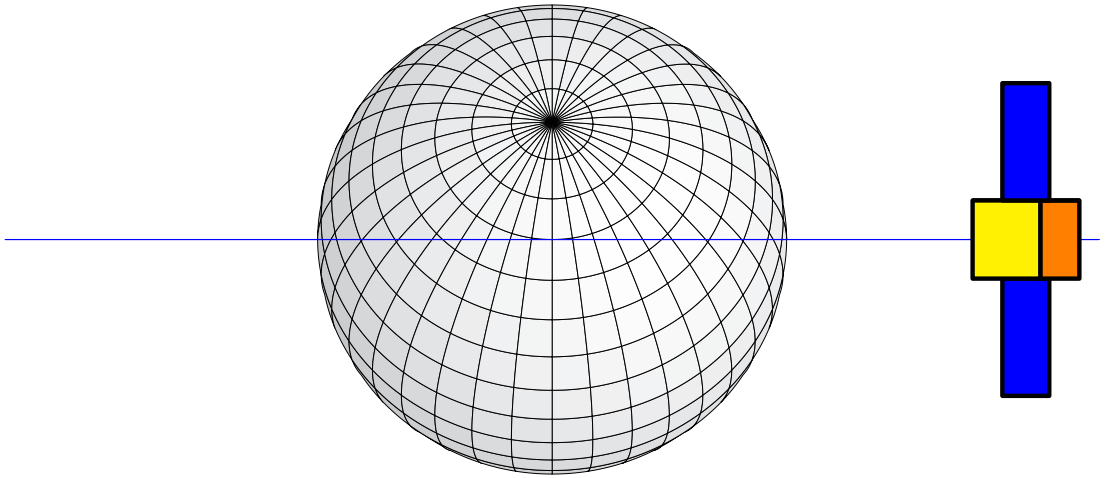

Observing the satellite from the Sun

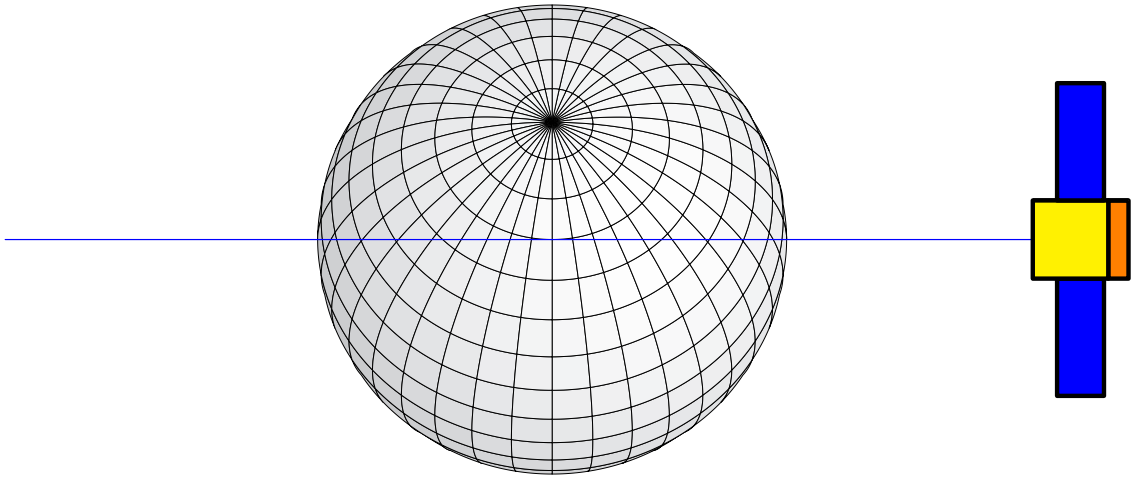

Observing the satellite from the Sun

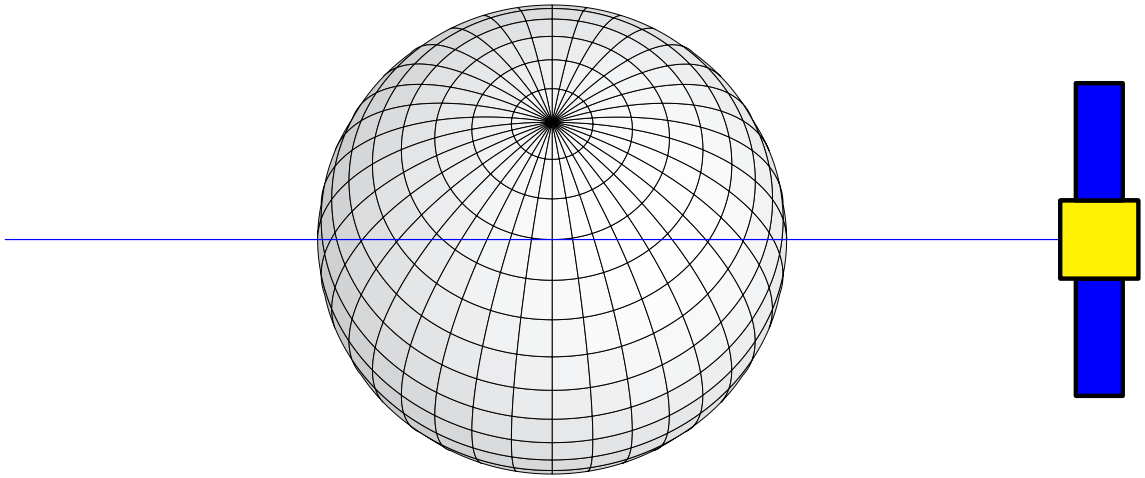

Observing the satellite from the Sun

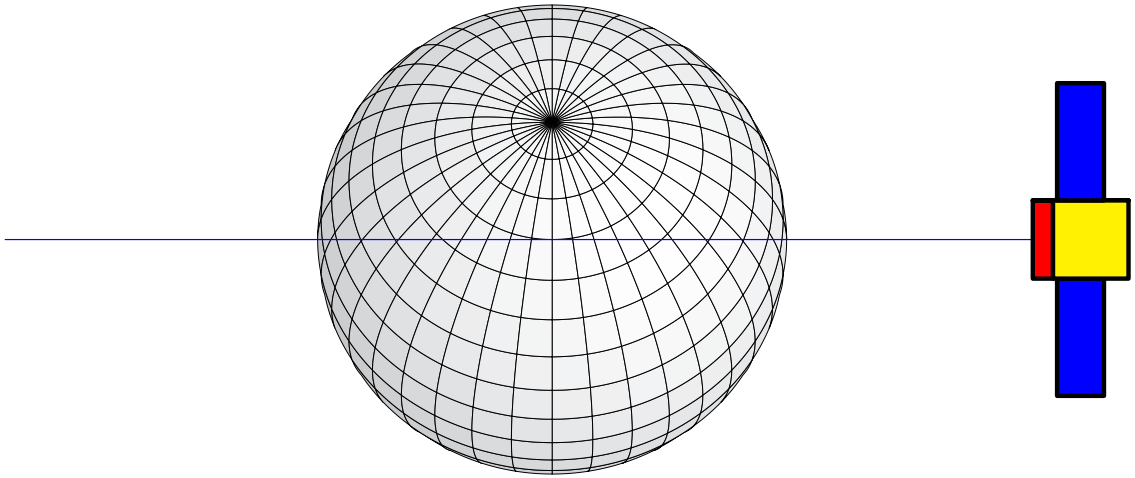

Observing the satellite from the Sun

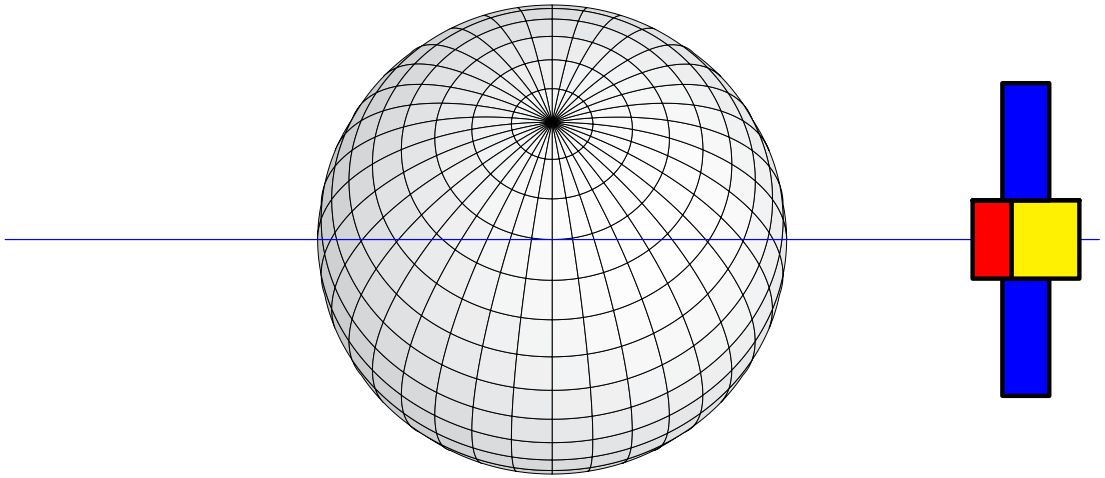

Observing the satellite from the Sun

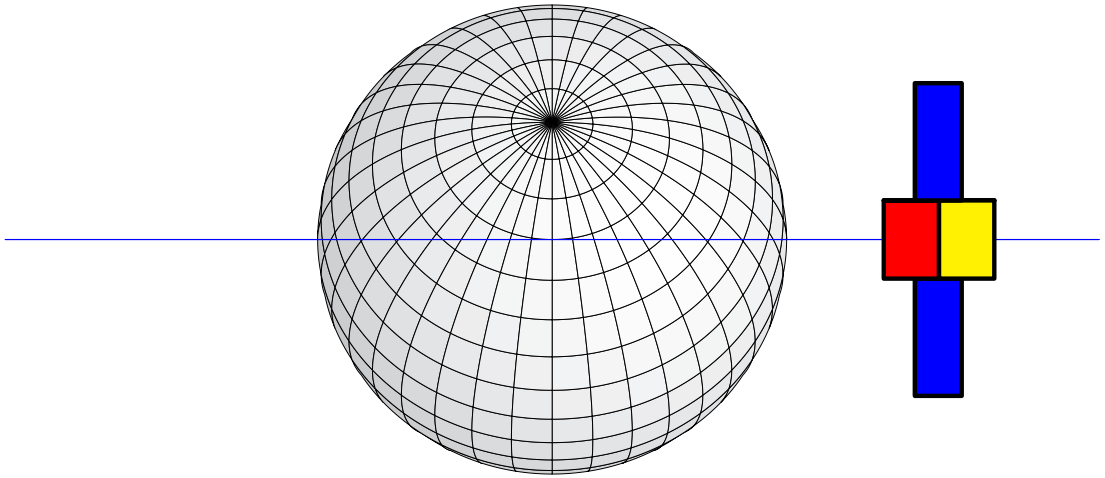

Observing the satellite from the Sun

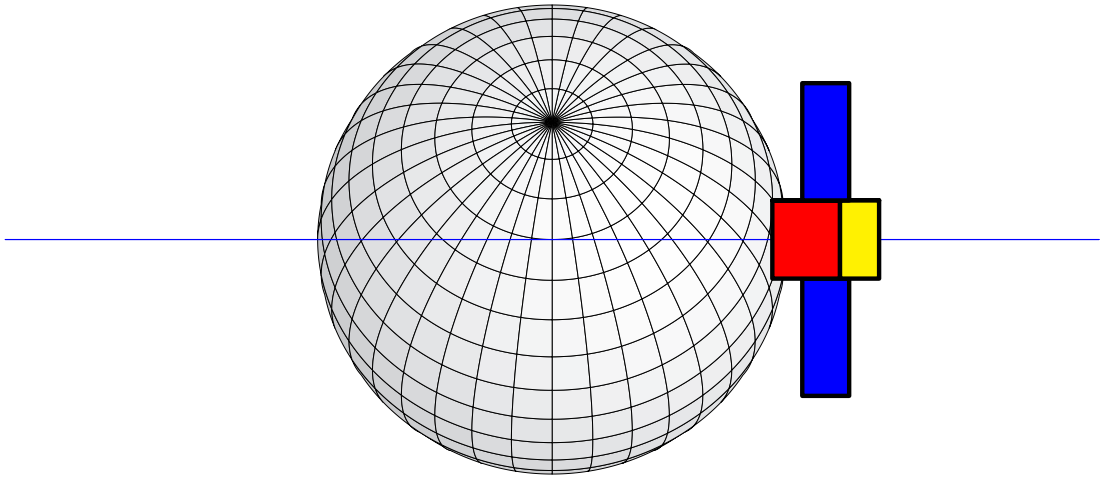

Observing the satellite from the Sun

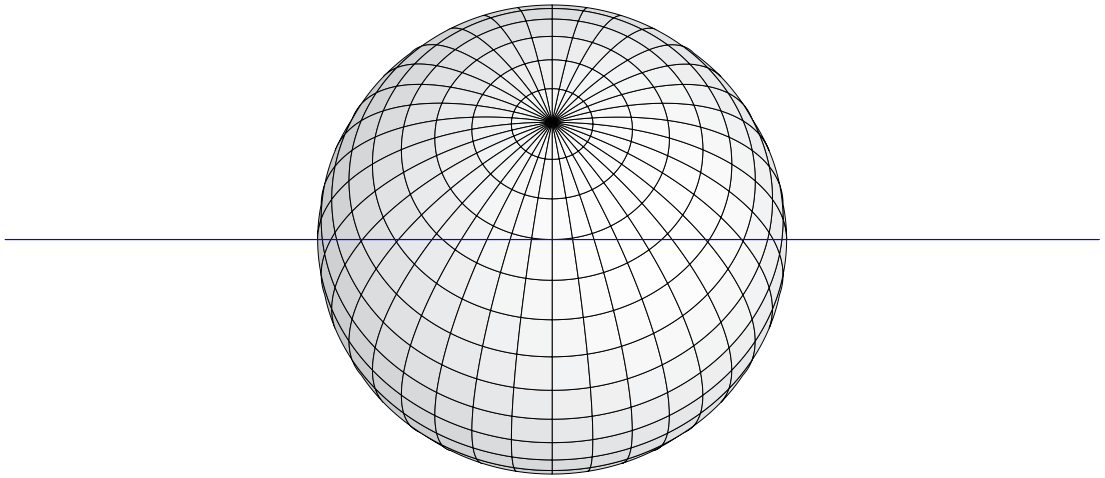

Observing the satellite from the Sun

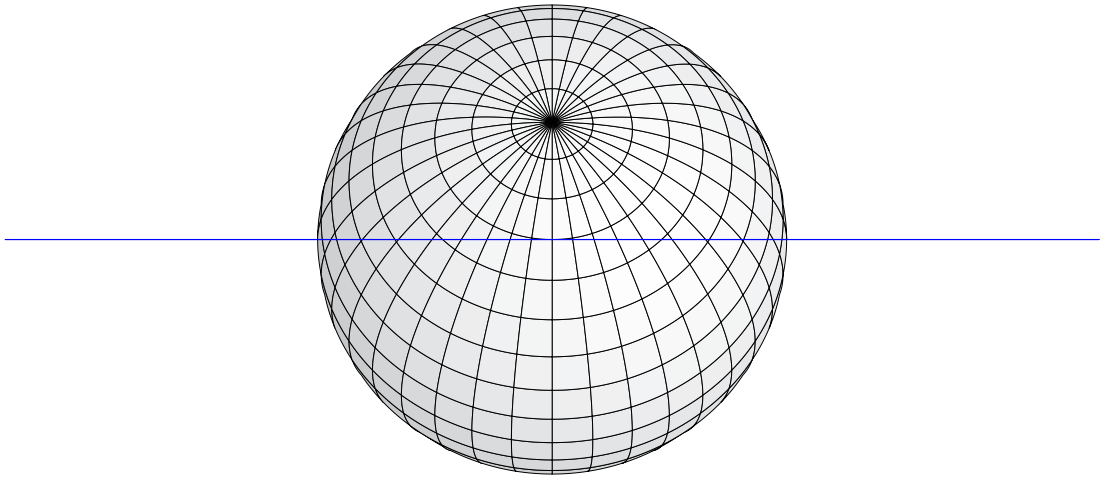

Observing the satellite from the Sun

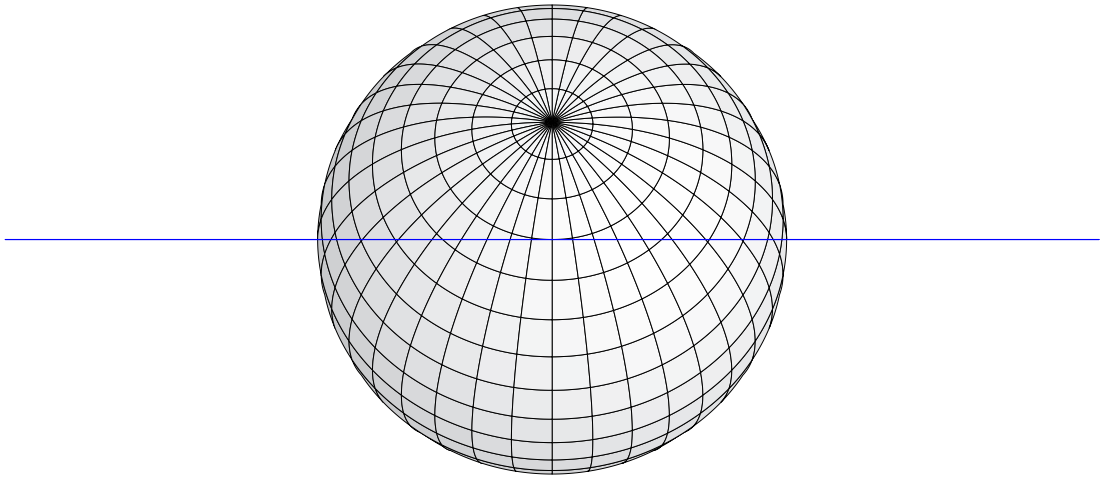

Observing the satellite from the Sun

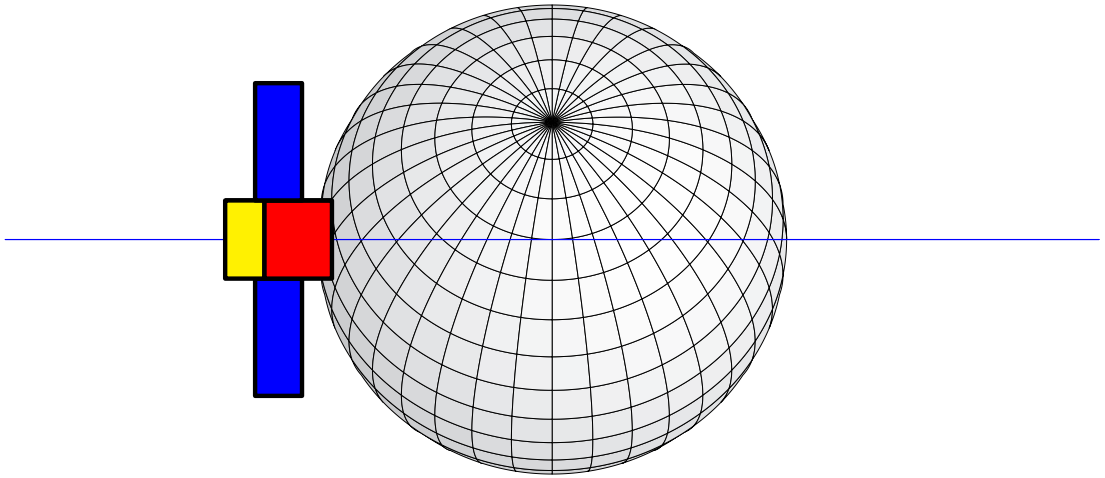

Observing the satellite from the Sun

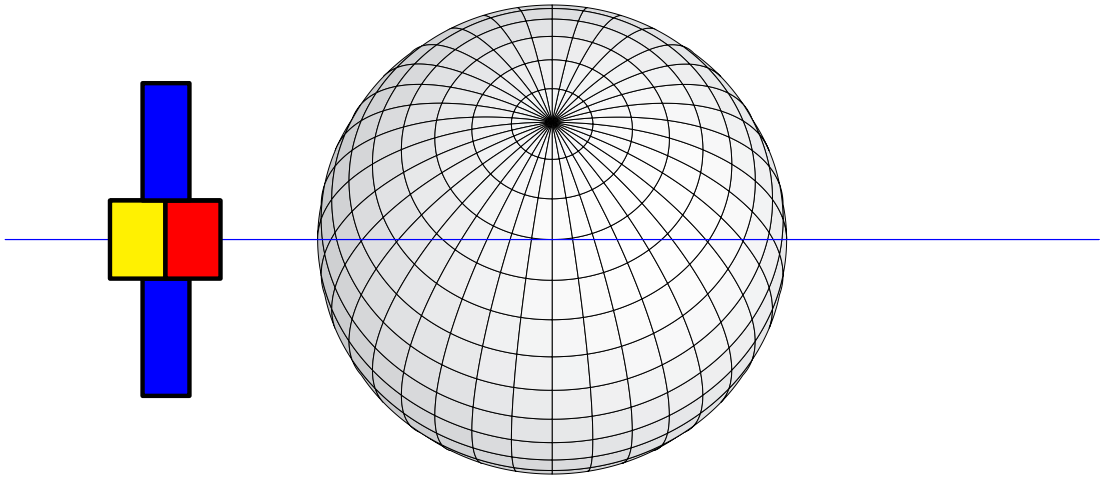

Observing the satellite from the Sun

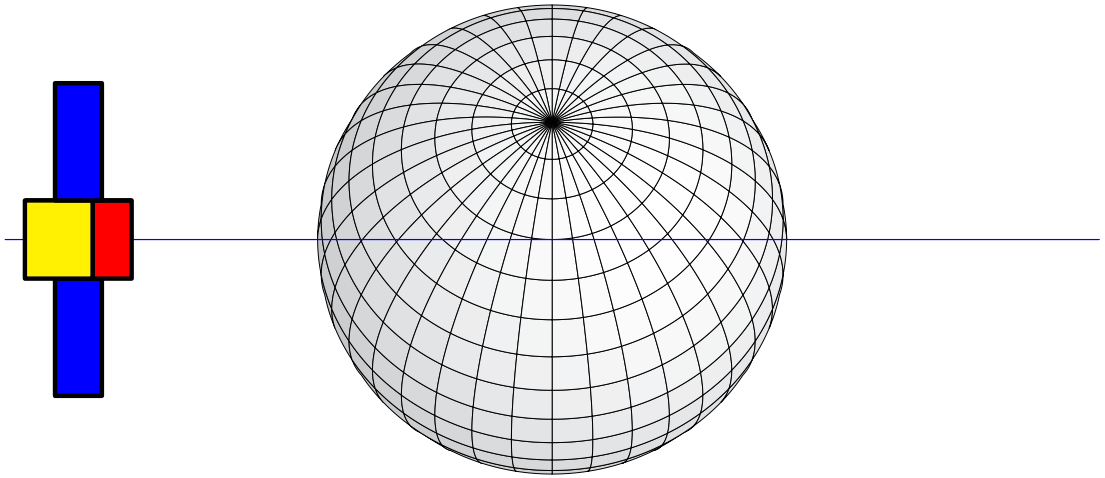

Observing the satellite from the Sun

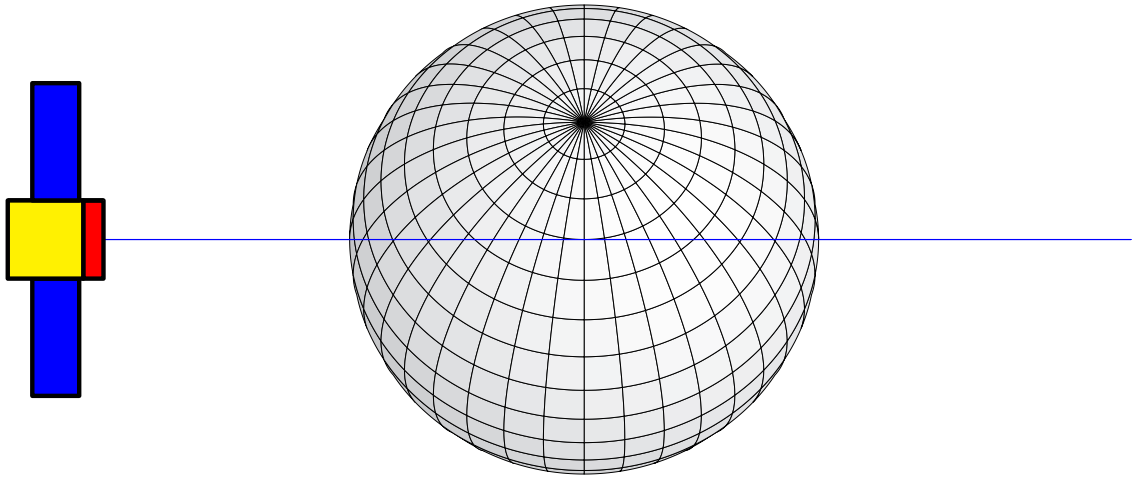

Observing the satellite from the Sun

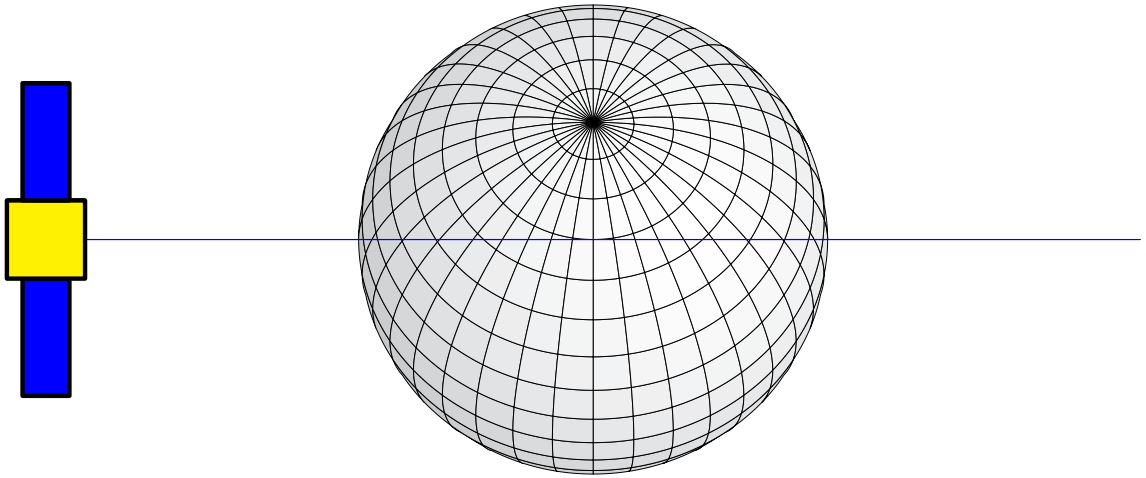

Observing the satellite from the Sun

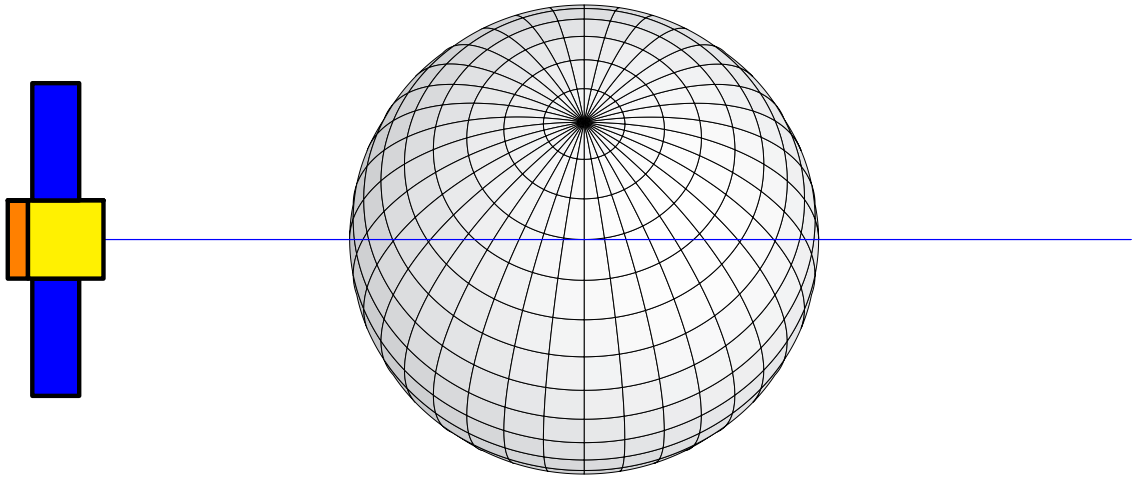

Observing the satellite from the Sun

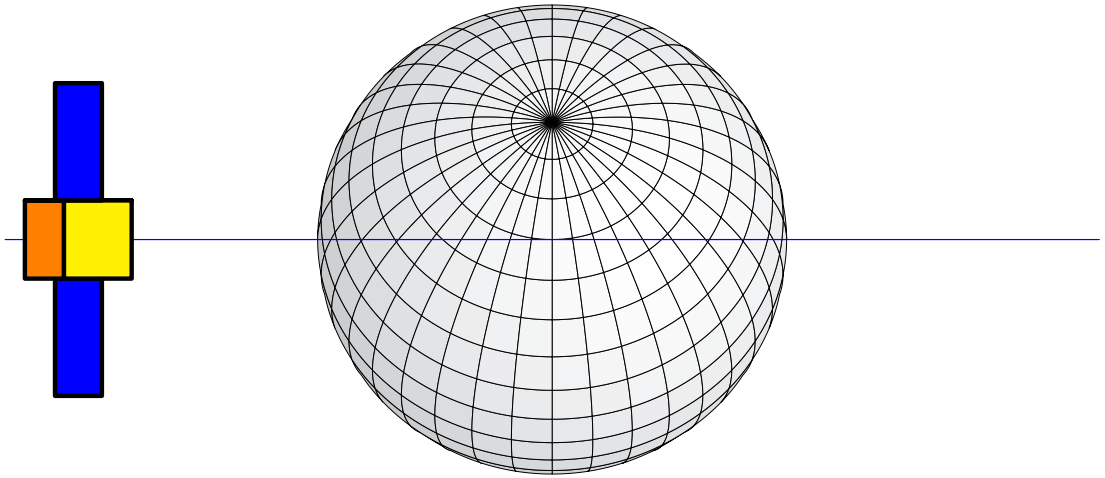

Observing the satellite from the Sun

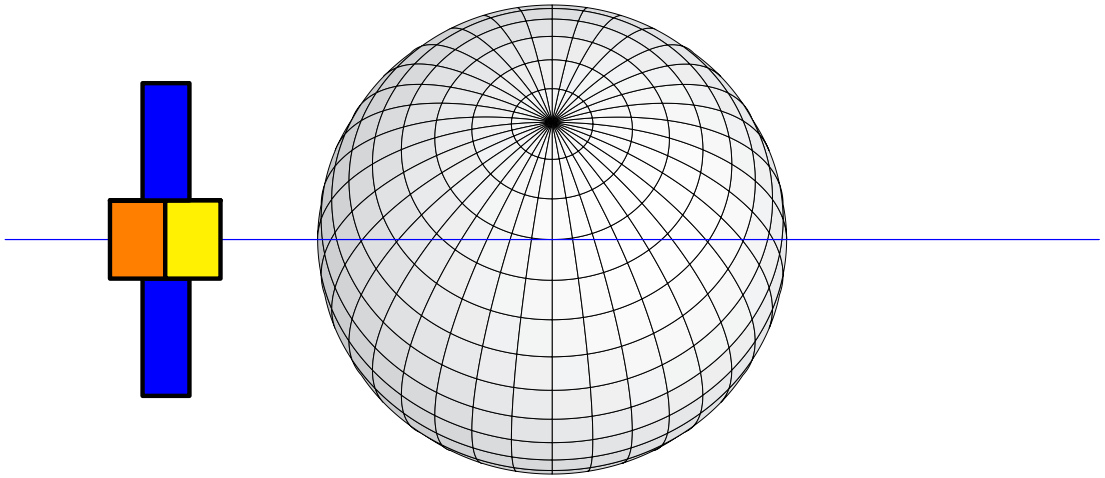

Observing the satellite from the Sun

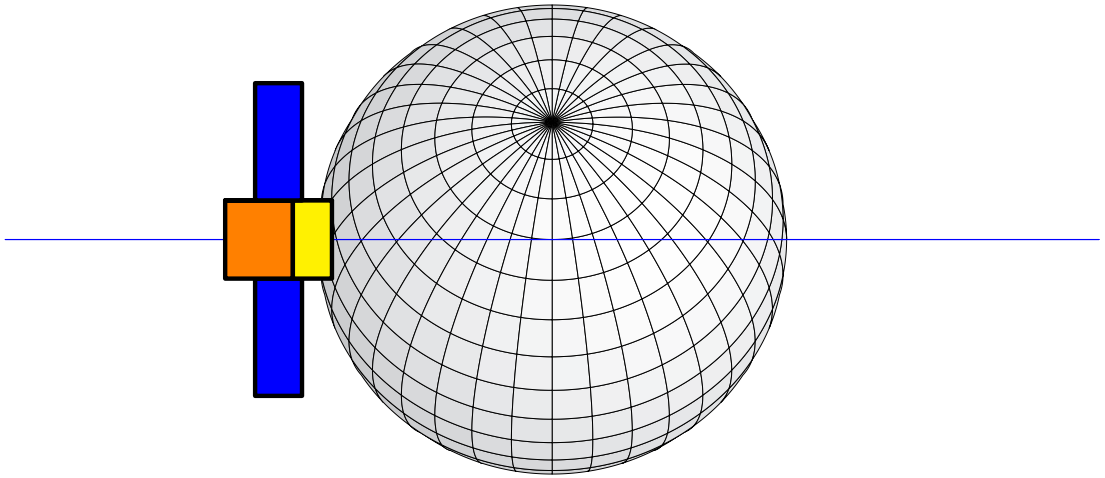

Observing the satellite from the Sun

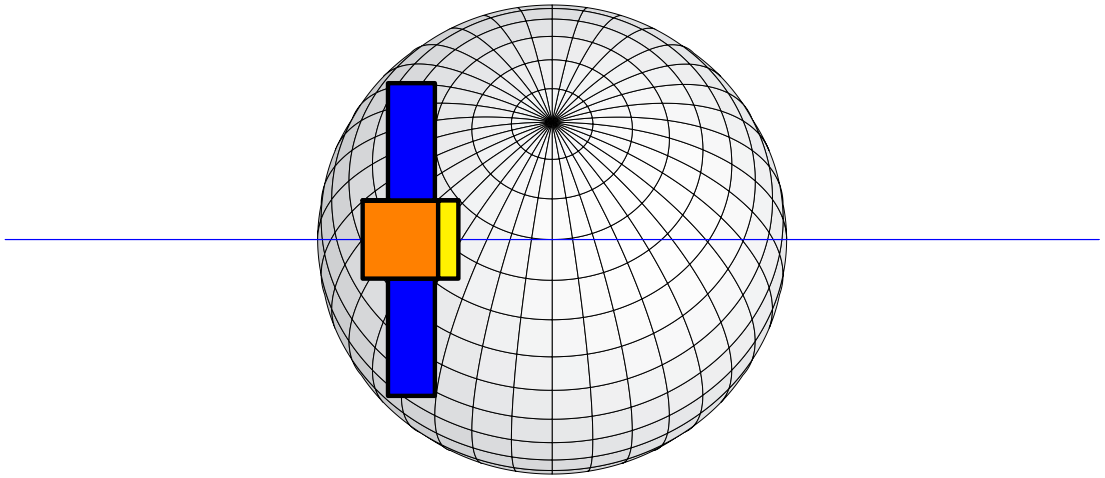

Observing the satellite from the Sun

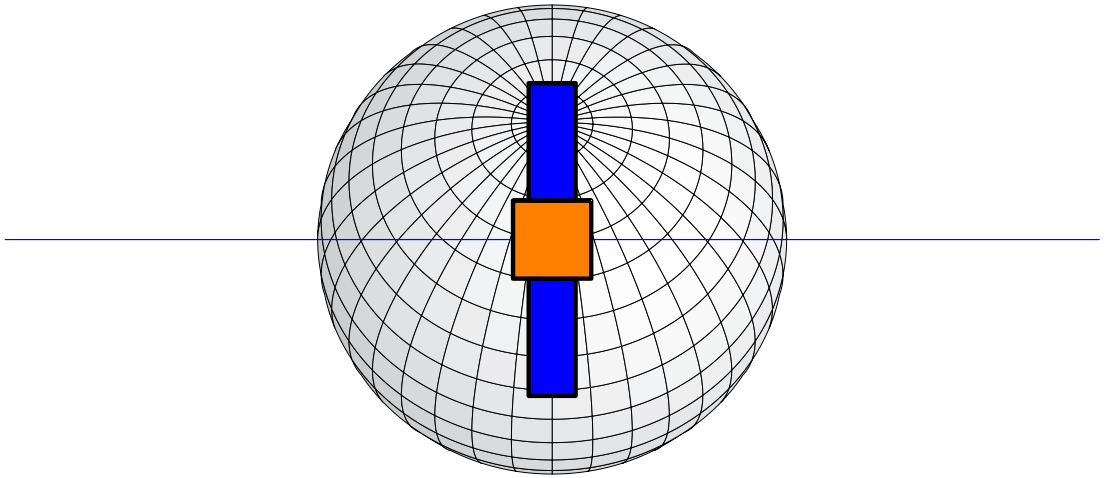

Conclusions

- The solar panels are pointing to the Sun and causing only a constant perturbation in D–direction.

Conclusions

- The solar panels are pointing to the Sun and causing only a constant perturbation in D–direction.
- If the Sun is perpenticular to the orbital plane no periodic solar radiation pressure perturbations are expected.

Conclusions

- The solar panels are pointing to the Sun and causing only a constant perturbation in D–direction.
- If the Sun is perpenticular to the orbital plane no periodic solar radiation pressure perturbations are expected.
- If the Sun is located in the orbital plane a once–per–revolution signal is expected in the X–direction and a twice–per–revolution signal in the D–direction.

Conclusions

- The solar panels are pointing to the Sun and causing only a constant perturbation in D–direction.
- If the Sun is perpenticular to the orbital plane no periodic solar radiation pressure perturbations are expected.
- If the Sun is located in the orbital plane a once–per–revolution signal is expected in the X–direction and a twice–per–revolution signal in the D–direction.
- These periodic signals are the more pronounced the more the satellite body deviates from a sphere
  (less for a cube – GPS – than a cylinder – GLONASS)

Solar radiation pressure from models

Accelerations derived for GPS (Block IIA) satellites from a boxwing[1] and Rock-S[2] model

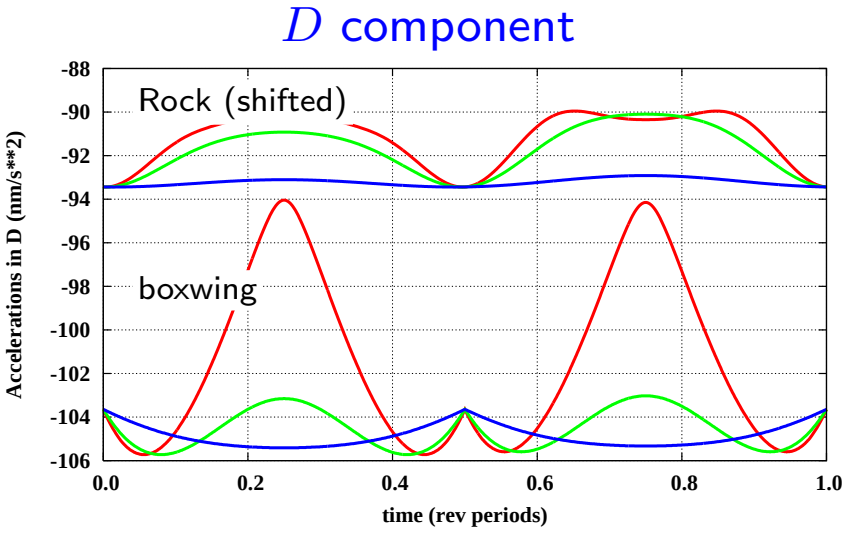

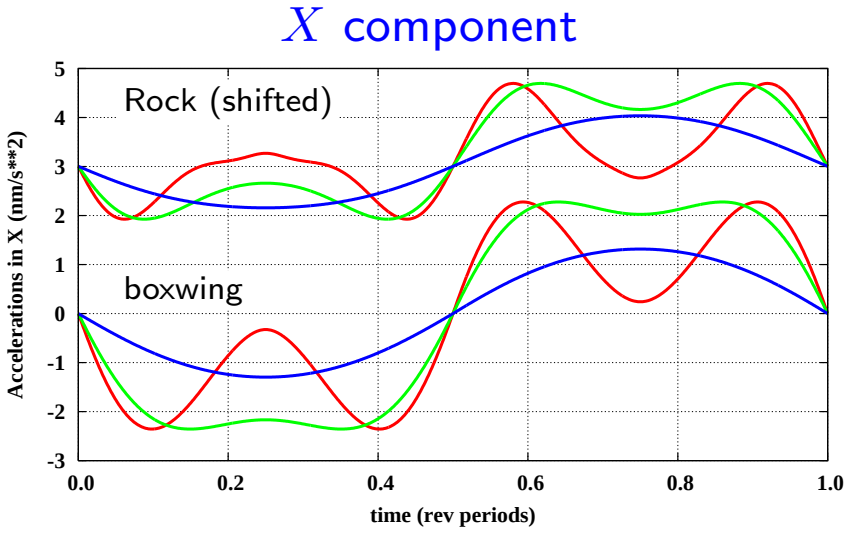

Computed for $\beta = 10°$ $\beta = 45°$ $\beta = 78°$

[1] as proposed by Carlos Rodriguez–Solano based on Fliegel et al. (1992)
[2] Fliegel et al. (1992)

Solar radiation pressure from models

Accelerations derived for GPS (Block IIA) satellites from a boxwing[1] and Rock-S[2] model

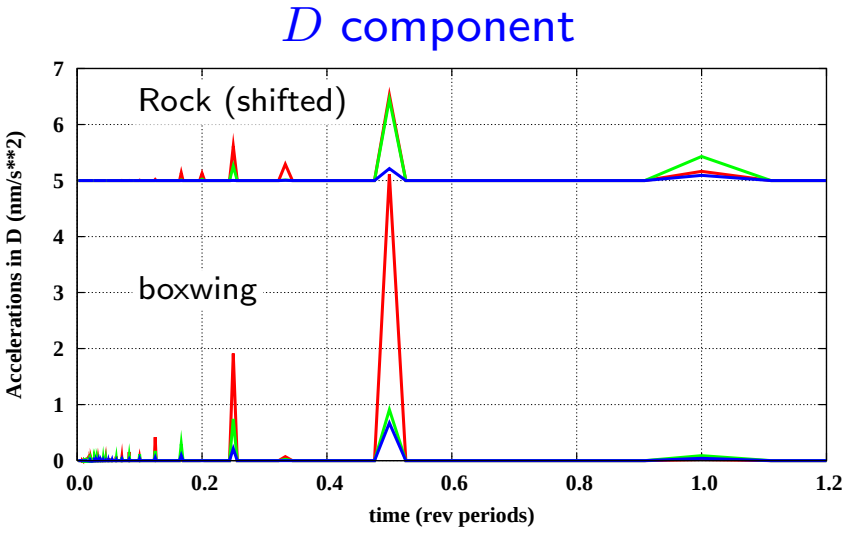

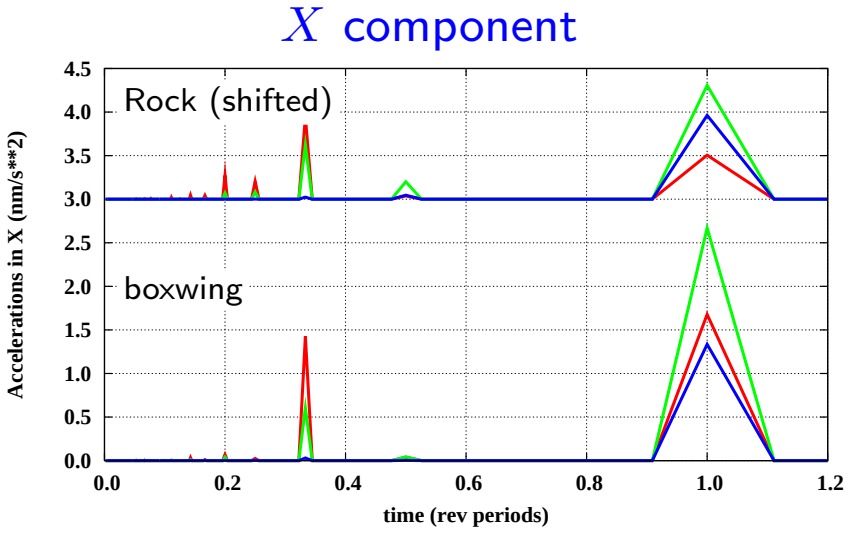

Computed for $\beta = 10°$ $\beta = 45°$ $\beta = 78°$

[1] as proposed by Carlos Rodriguez–Solano based on Fliegel et al. (1992)
[2] Fliegel et al. (1992)

Conclusions

- A Sun–fixed argument for the periodic terms is necessary to obtain interpretable series of these parameters:

$$\Delta u = u_{sat} - u_{Sun}$$

- Solar radiation pressure for satellites flying according to the previously mentioned models can be represented by:

$$\begin{aligned} D &= \ D_0 \ + D_2 \cos(2\Delta u) + D_4 \cos(4\Delta u) + \ldots \\ Y &= (Y_0) \\ X &= \qquad\qquad X_1 \cos(1\Delta u) + X_3 \cos(3\Delta u) + \ldots \end{aligned}$$

$Y_0 \neq 0$ if the satellite is flying "missaligned" with a Y–bias (e.g., GPS, except for Block IIF).

The old empirical CODE orbit model:

$$D = D_0$$
$$Y = Y_0$$
$$X = X_0 + X_{1,c}\cos(1u_{sat}) + X_{1,s}\sin(1u_{sat})$$

The new empirical CODE orbit model:

$$D = D_0$$

$$Y = Y_0$$

$$X = X_0 + X_{1,c}\cos(1\Delta u) + X_{1,s}\sin(1\Delta u)$$

with $\Delta u = u_{sat} - u_{Sun}$

- changing the angular argument: u_{sat} to Δu

The new empirical CODE orbit model:

$$
\begin{aligned}
D &= D_0 + D_{2,c}\cos(2\Delta u) + D_{2,s}\sin(2\Delta u) \\
&\quad + D_{4,c}\cos(4\Delta u) + B_{4,s}\sin(4\Delta u) \\
Y &= Y_0 \\
X &= X_0 + X_{1,c}\cos(1\Delta u) + X_{1,s}\sin(1\Delta u)
\end{aligned}
$$

with $\Delta u = u_{sat} - u_{Sun}$

- changing the angular argument: u_{sat} to Δu
- adding periodic terms in the D component

Impact on the Geocenter Estimates

Spectra from geocenter estimates: Z component

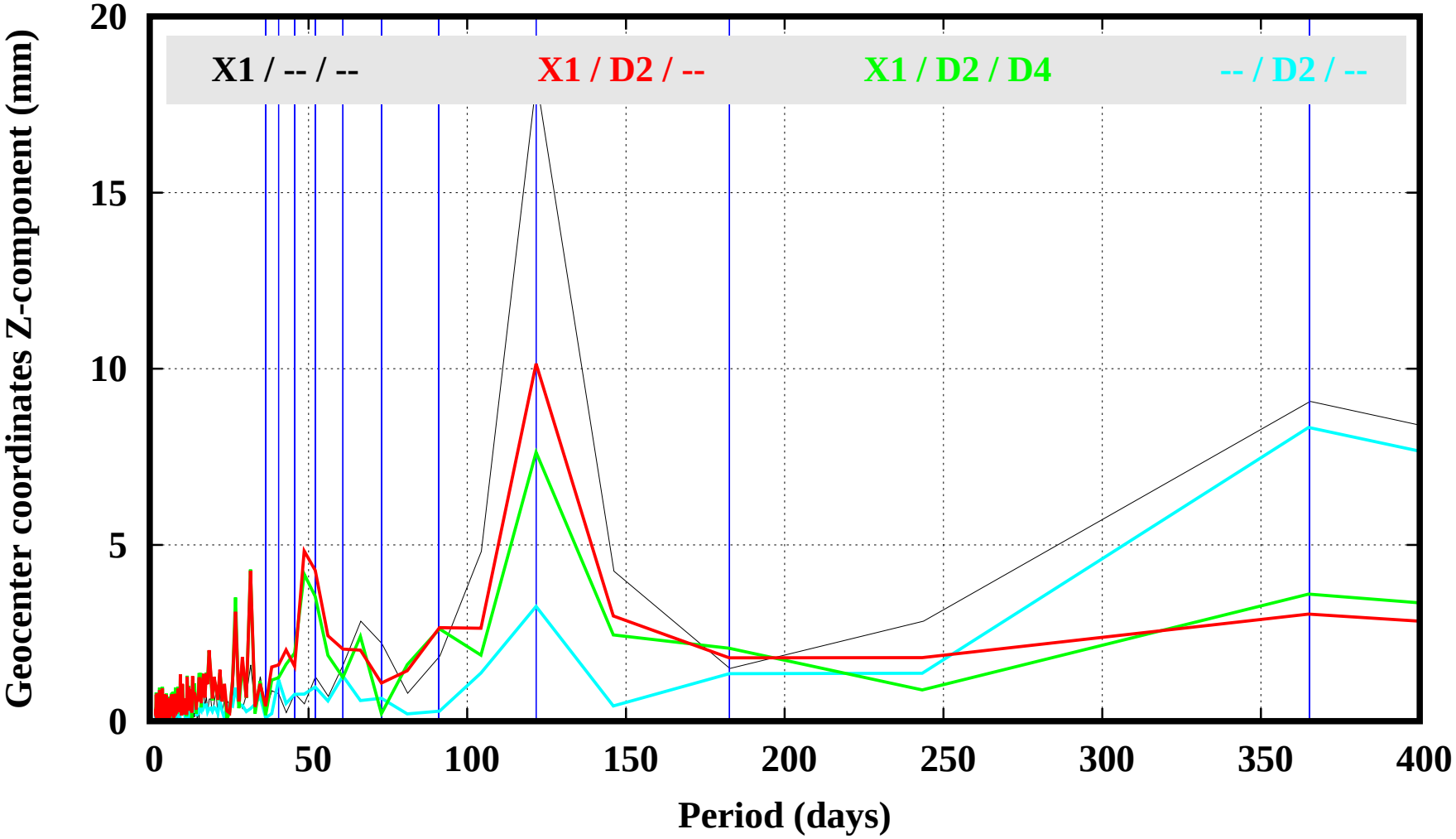

Impact on the Earth Rotation Parameters

Spectra from ERP solution: Polar motion – X

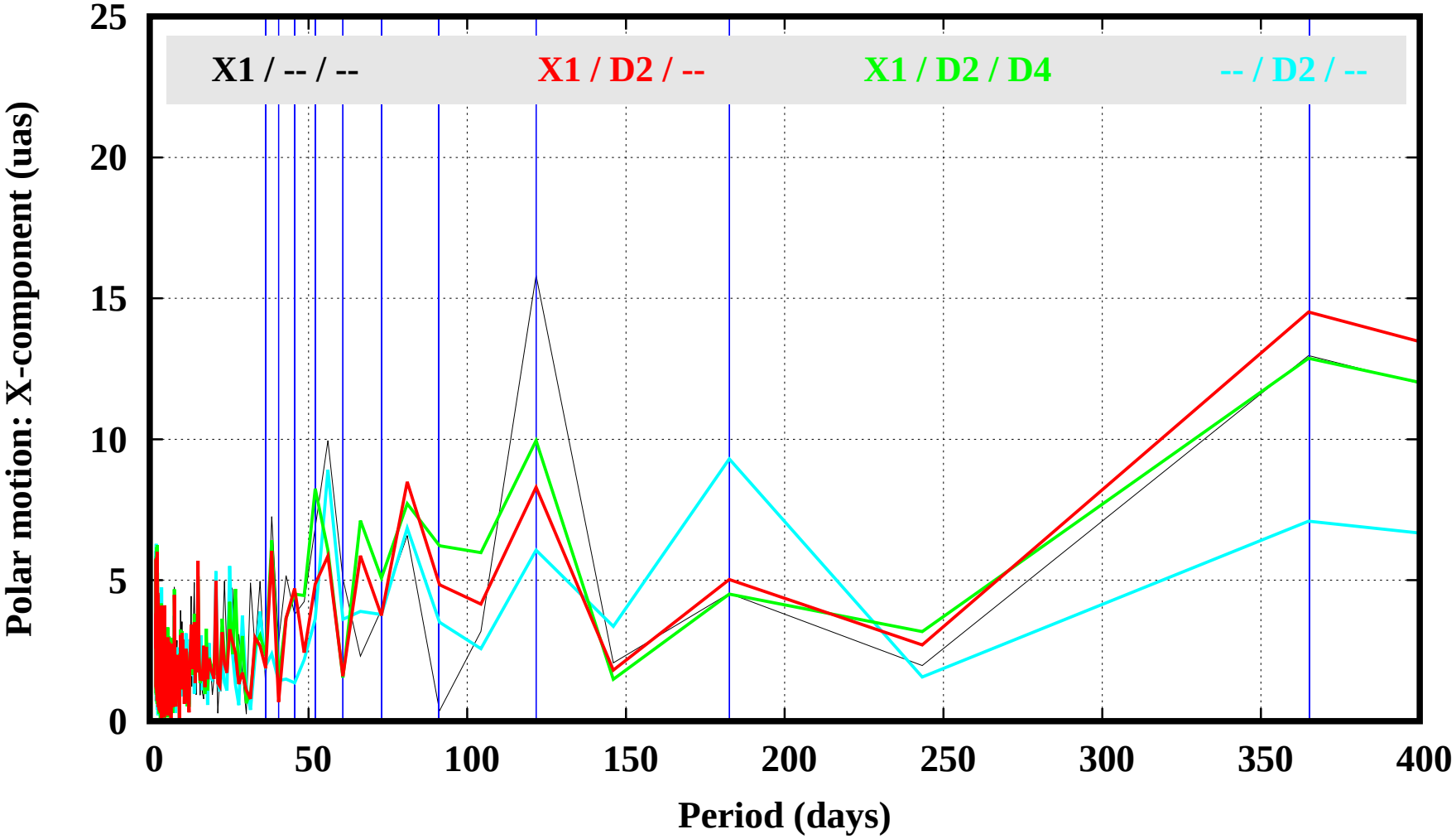

Differences w.r.t. IERS C04 series (related to ITRF2008) has been analysed.

Impact on the Earth Rotation Parameters

Spectra from ERP solution: length of day

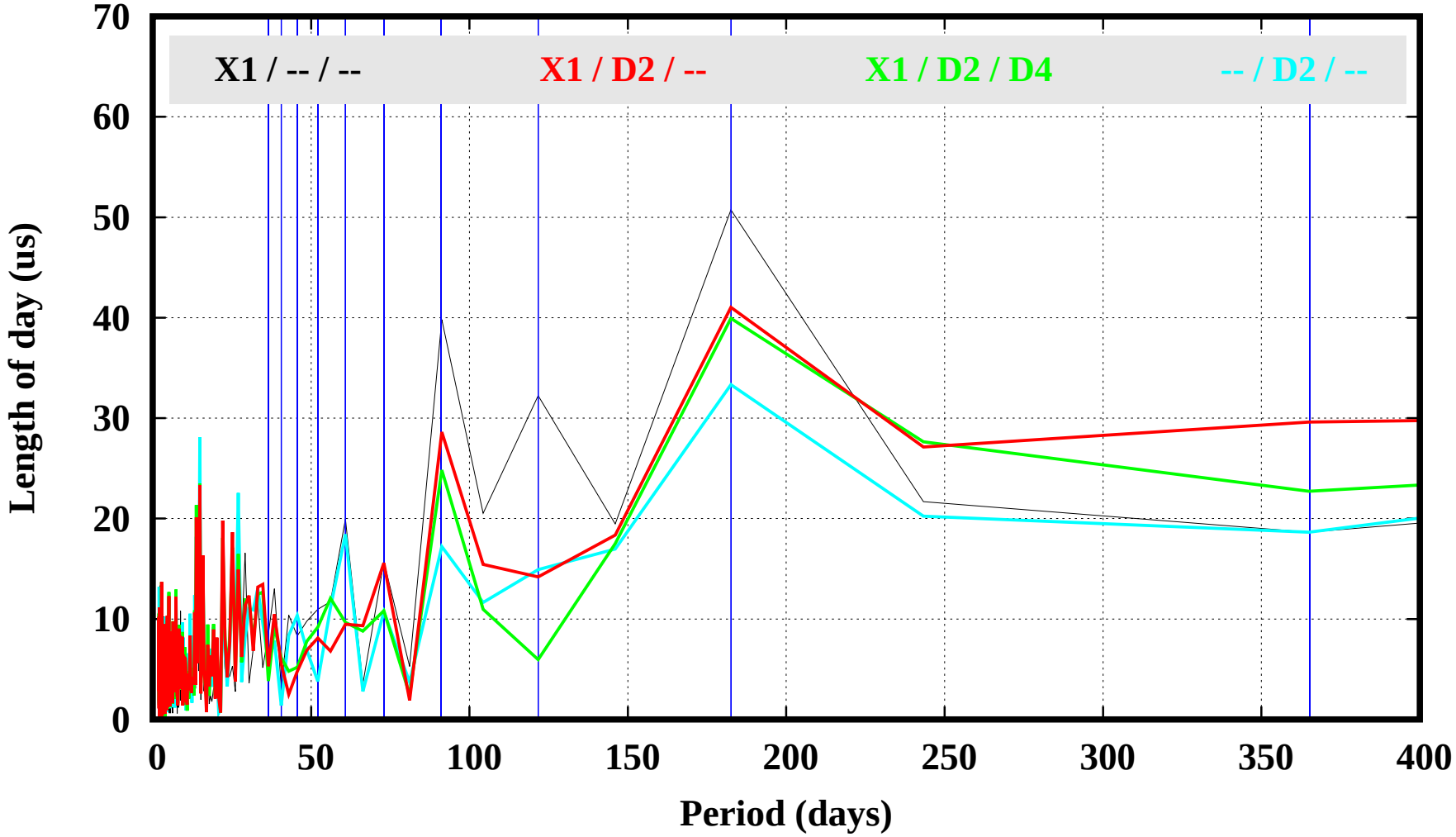

Differences w.r.t. IERS C04 series, release ITRF2008 has been analysed.

CODE MGEX solution

CODE MGEX solution includes now


GPS


GLONASS


Galileo


BeiDou


QZSS

Solution characteristics:

- overall about 70 satellites
- consistent five system solution for orbit and clocks
- reprocessed series with the new ECOM since 2014
- since 2015: post-processing with two weeks delay
- `ftp://cddis.gsfc.nasa.gov/gnss/products/mgex`
  solution ID: `com`

Impact of new ECOM on Galileo orbits

SLR Residuals

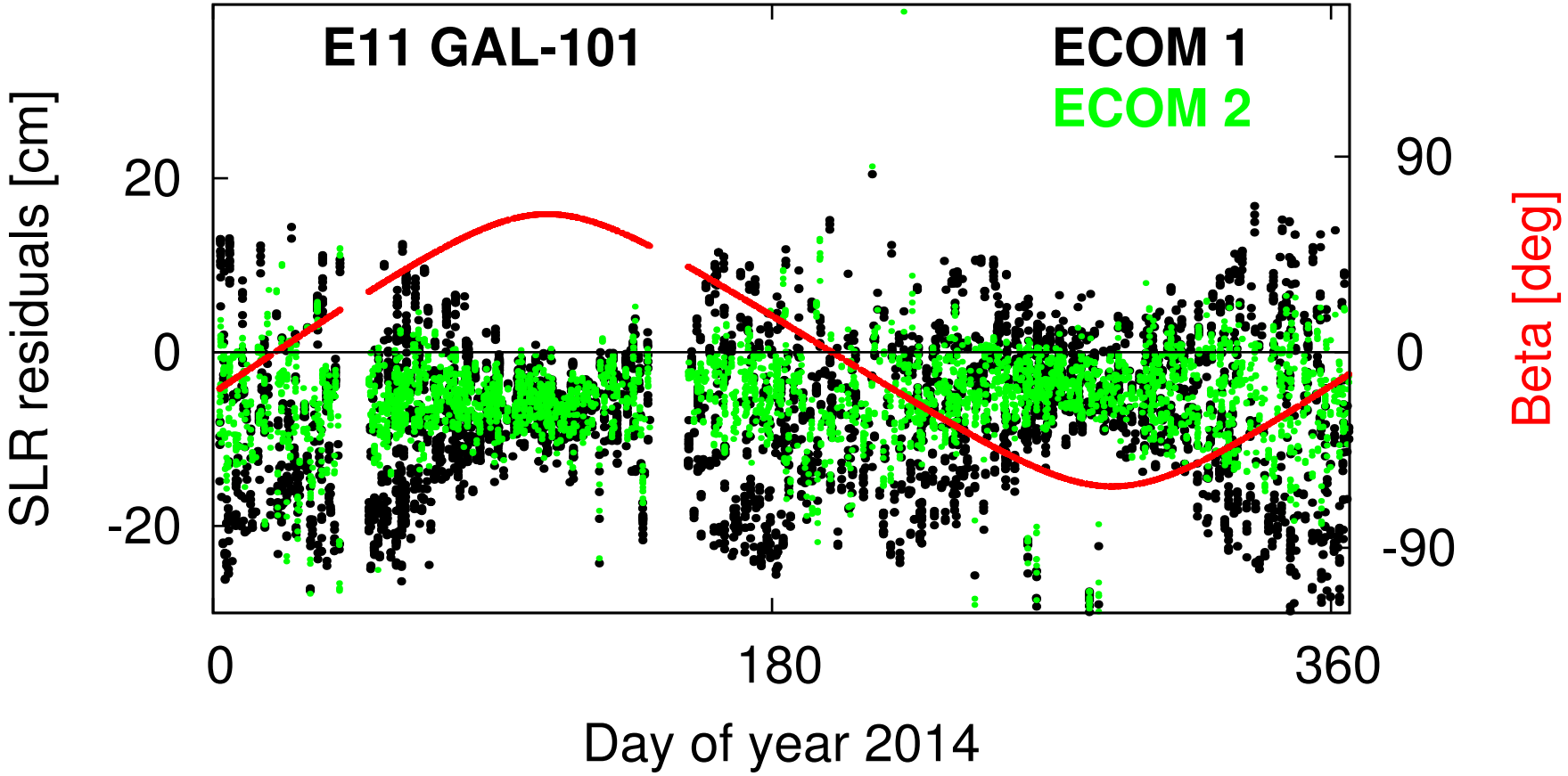

Significant reduction of size and dependency of SLR residuals on the elevation of the Sun above the orbital plane

Impact of new ECOM on Galileo clock corrections

Linear fit of satellite clocks

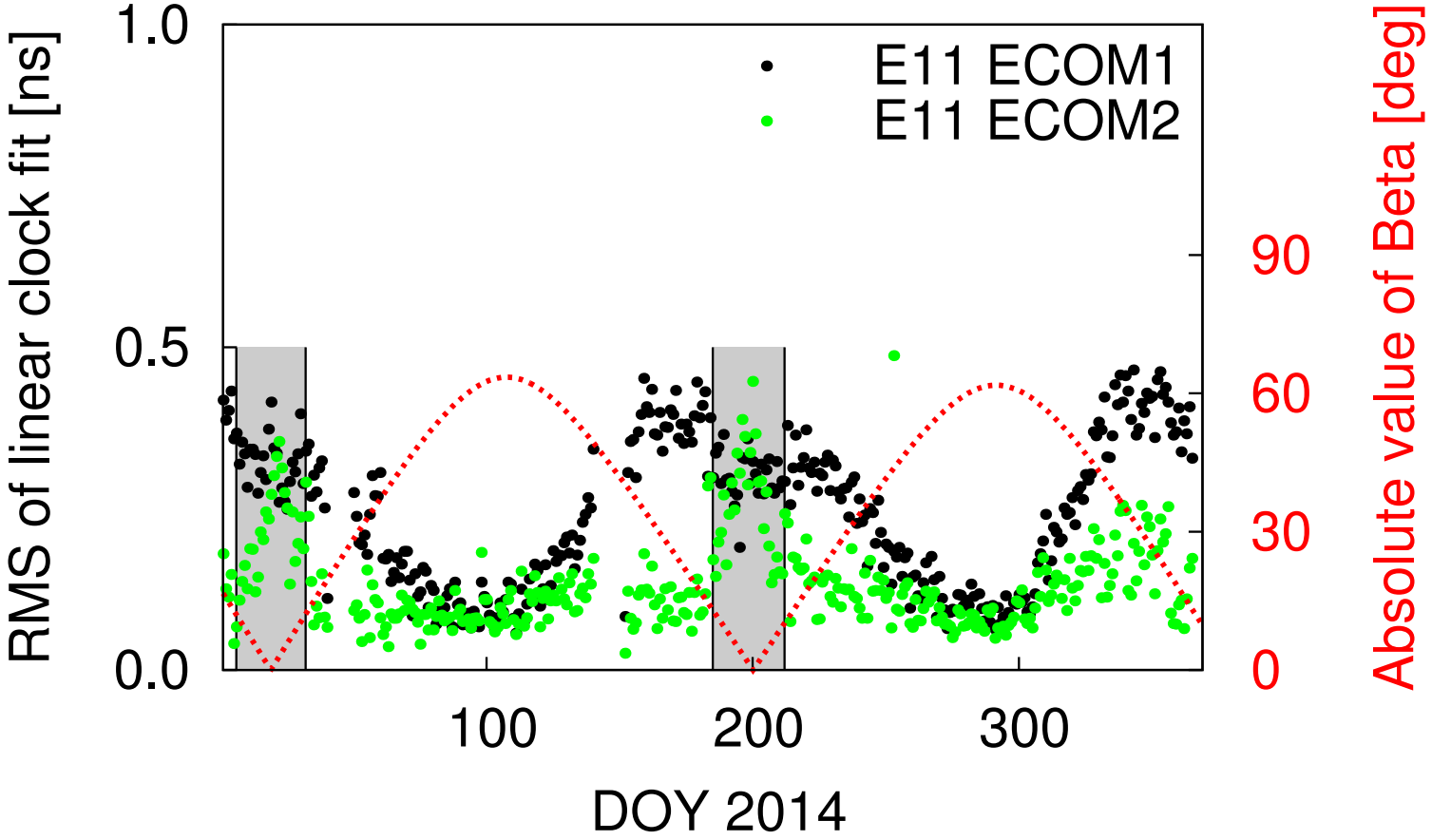

Significant reduction of magnitude and dependency on the elevation of the Sun above the orbital plane

Impact of new ECOM on Galileo clock corrections

Satellite clock corrections

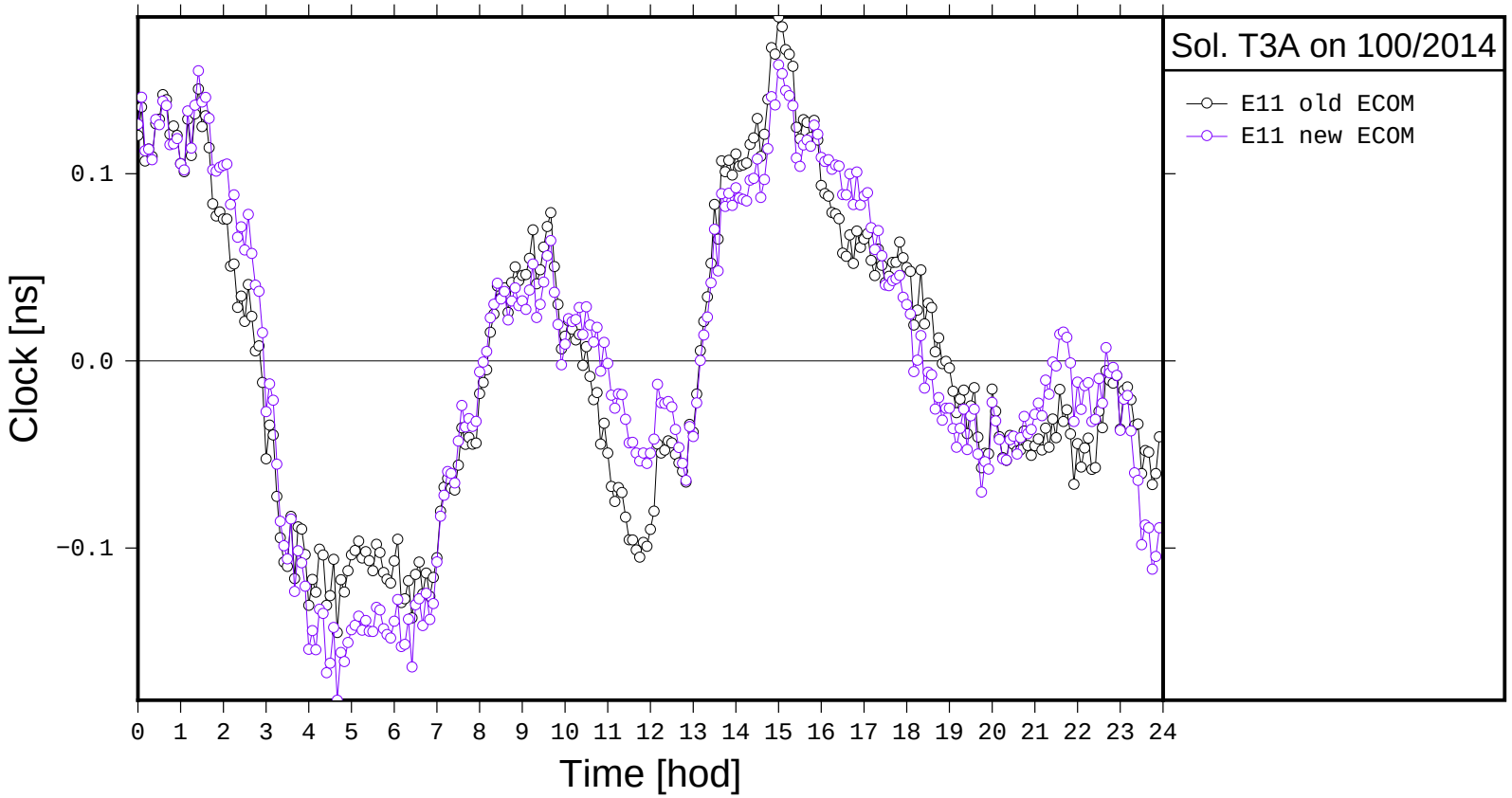

Day 100 of year 2014 – large beta-angle

no improvement (variation in clock signal about ±0.15 ns)

Impact of new ECOM on Galileo clock corrections

Satellite clock corrections

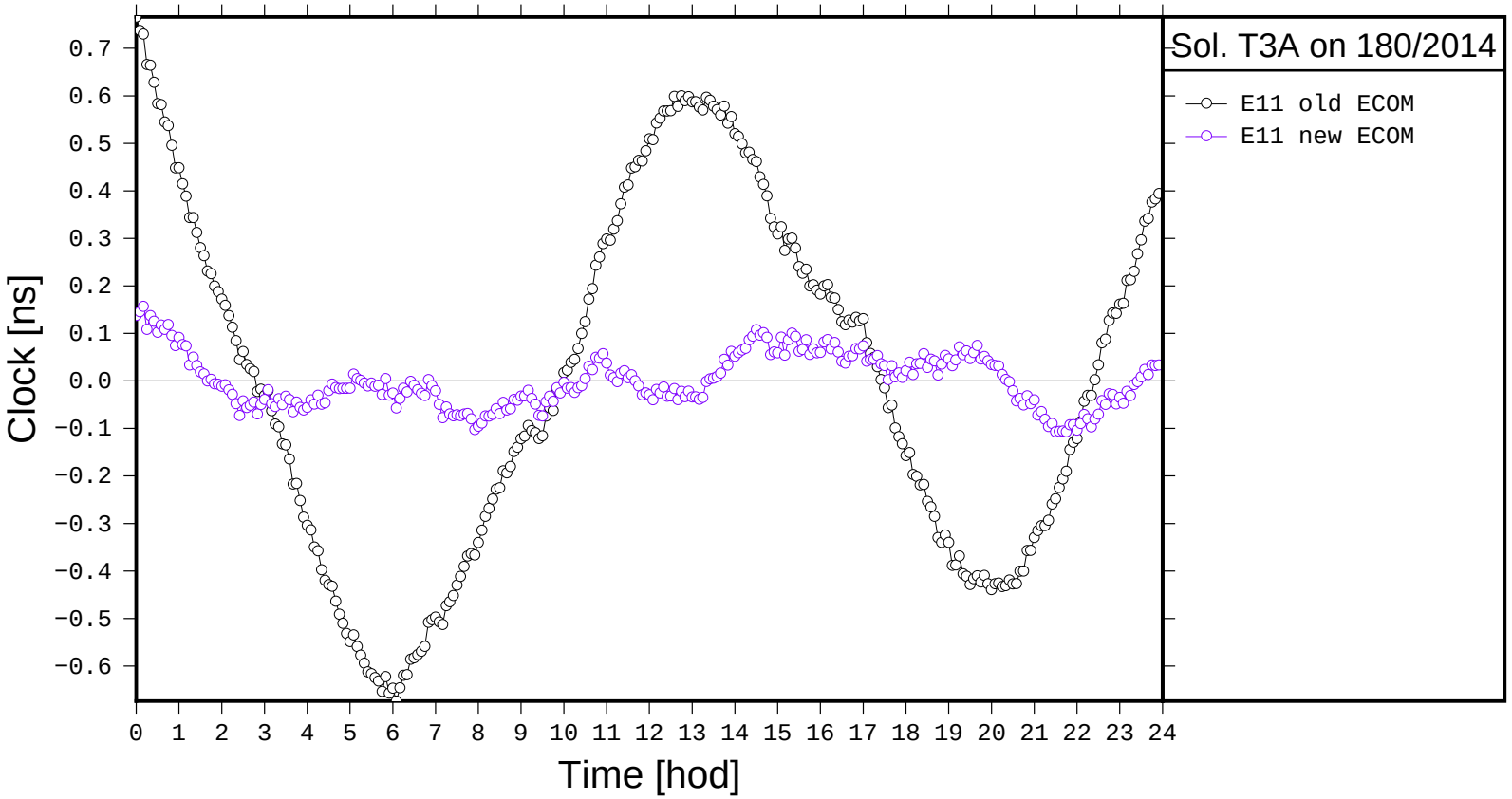

Day 180 of year 2014 – large beta-angle

Periodic signal was significantly reduced (± 0.75 ns $\rightarrow$ ± 0.15 ns)

Impact of new ECOM on QZSS clock corrections

Linear fit of satellite clocks

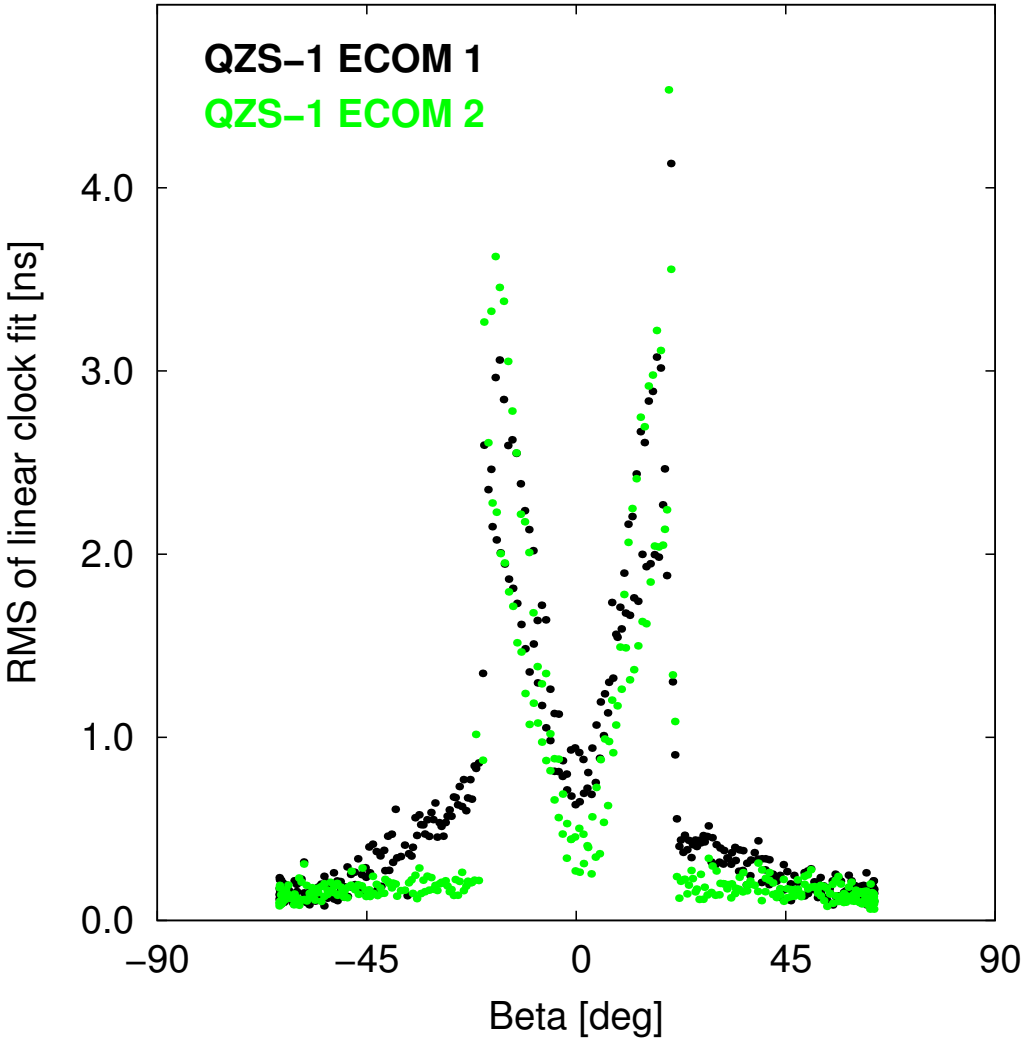

- $|\beta| > 20$ degree
  very good performance of satellite clock (up to 0.1 ns)
- $|\beta| < 20$ degree
  unmodelled normal attitude are directly mapped into satellite clock estimates

Impact of new ECOM on GLONASS orbits

SLR Residuals

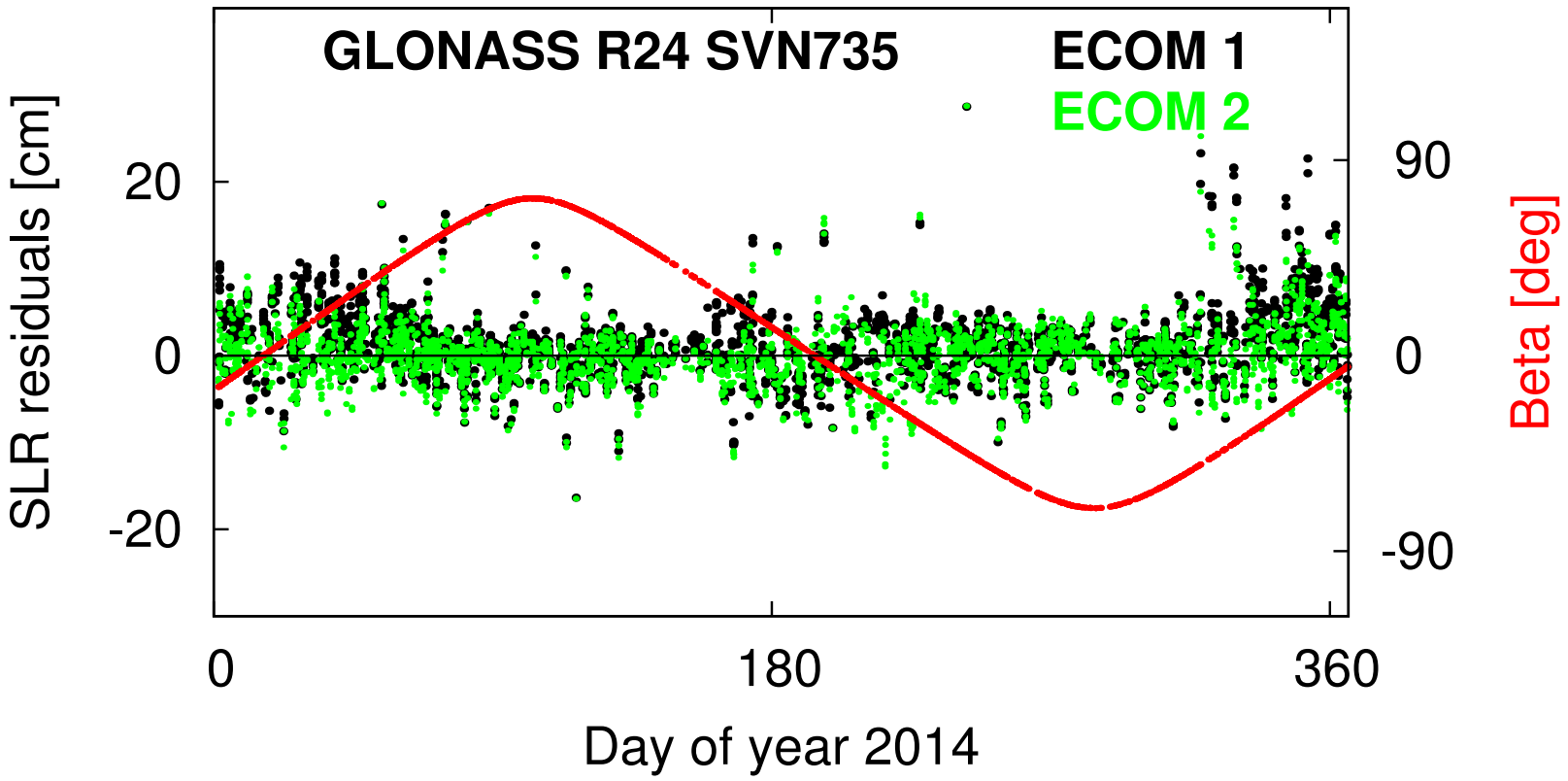

Reduction of SLR residuals when the Sun near to the orbital plane (for most of the satellites)

Impact of new ECOM on GLONASS orbits

SLR Residuals

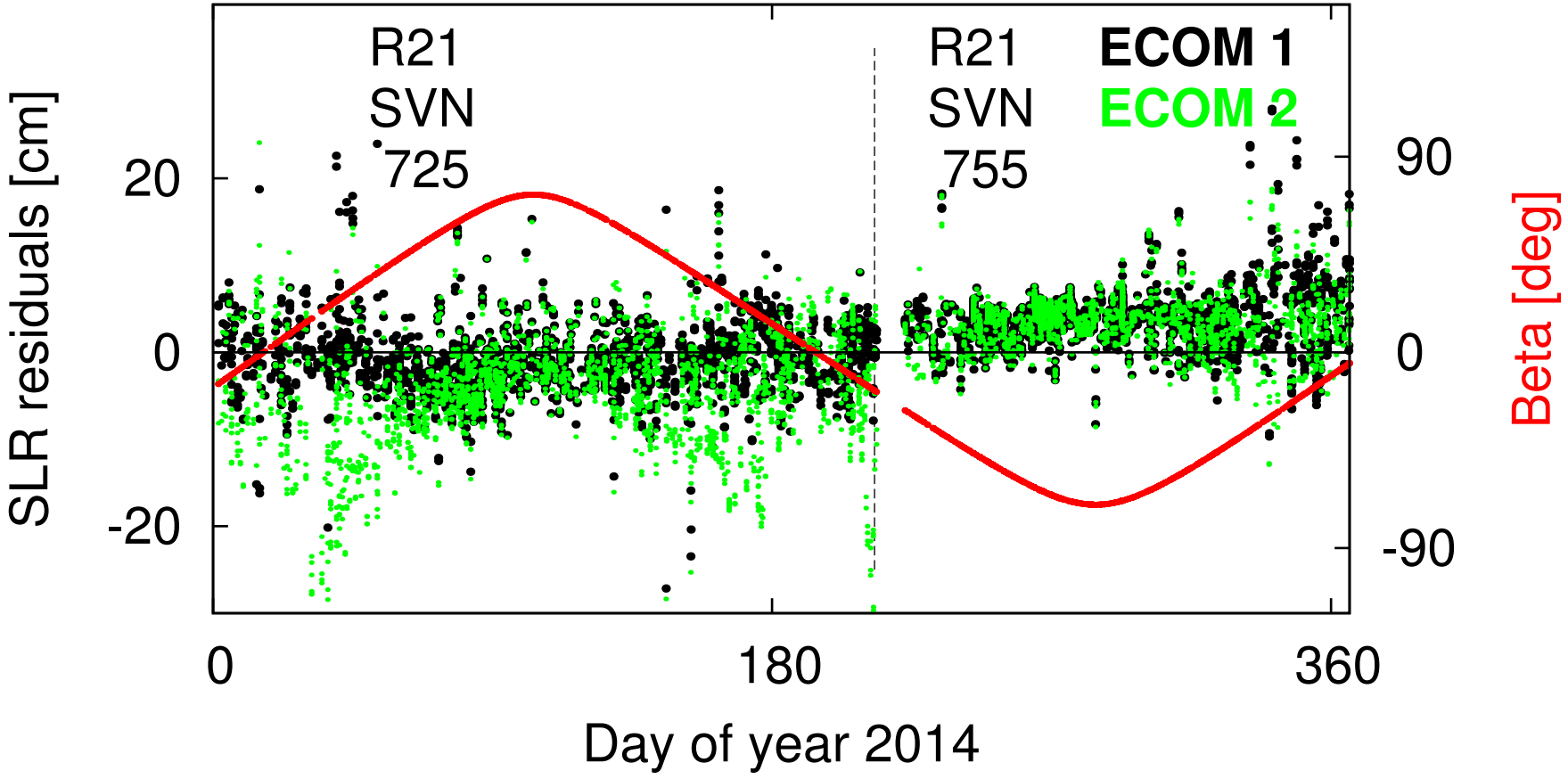

. . . there are also examples for a degradiation

Bernese GNSS Software, Version 5.2

Representation of CODE orbit solution from Jan. 10, 2013 by ORBGEN:

SAT	#POS	RMS (M)	QUADRATIC MEAN OF O-C (M) TOTAL	RADIAL	ALONG	OUT
1	96	0.001	0.001	0.000	0.001	0.000
2	96	0.000	0.000	0.000	0.001	0.000
3	96	0.000	0.000	0.000	0.001	0.000
4	96	0.001	0.000	0.000	0.001	0.000
..	..	.....	.....	.....	.....	.....
32	96	0.000	0.000	0.000	0.001	0.000
101	96	0.001	0.003	0.001	0.004	0.000
102	96	0.001	0.002	0.001	0.004	0.000
...	..	.....	.....	.....	.....	.....
109	96	0.001	0.002	0.001	0.004	0.000
110	96	0.001	0.002	0.001	0.004	0.000
...	..	.....	.....	.....	.....	.....
123	96	0.001	0.007	0.002	0.011	0.000
124	96	0.001	0.002	0.001	0.003	0.000

ORBGEN is adjusting all nine radiation pressure parameters (classical orbit model DYX) and stochastic pulses at noon fully consistently with the orbit model at CODE at that time

Bernese GNSS Software, Version 5.2

Representation of CODE orbit solution from Jan. 10, 2014 by ORBGEN:

SAT	#POS	RMS (M)	QUADRATIC MEAN OF O-C (M) TOTAL	RADIAL	ALONG	OUT
1	96	0.001	0.002	0.001	0.003	0.001
2	96	0.001	0.001	0.001	0.001	0.001
3	96	0.003	0.003	0.004	0.003	0.002
4	96	0.002	0.002	0.002	0.001	0.002
..	..	.....	.....	.....	.....	.....
32	96	0.001	0.001	0.001	0.001	0.001
101	96	0.001	0.001	0.001	0.002	0.000
102	96	0.001	0.001	0.001	0.001	0.000
...	..	.....	.....	.....	.....	.....
109	96	0.002	0.007	0.003	0.012	0.001
110	96	0.002	0.005	0.002	0.008	0.002
...	..	.....	.....	.....	.....	.....
123	96	0.002	0.011	0.004	0.018	0.001
124	96	0.001	0.006	0.003	0.010	0.001

ORBGEN is adjusting all nine radiation pressure parameters (classical orbit model DYX, mainly compensating the missing albedo and antenna thrust model) and stochastic pulses at noon

Bernese GNSS Software, Version 5.2

Representation of CODE orbit solution from Jan. 10, 2015 by ORBGEN:

SAT	#POS	RMS (M)	QUADRATIC MEAN OF O-C (M) TOTAL	RADIAL	ALONG	OUT
1	96	0.004	0.004	0.005	0.004	0.003
2	96	0.012	0.011	0.017	0.008	0.003
3	96	0.003	0.003	0.001	0.001	0.004
4	96	0.009	0.008	0.012	0.007	0.004
..	..	.....	.....	.....	.....	.....
32	96	0.005	0.005	0.005	0.002	0.006
101	96	0.005	0.005	0.005	0.002	0.006
102	96	0.003	0.003	0.003	0.002	0.005
...	..	.....	.....	.....	.....	.....
109	96	0.012	0.012	0.018	0.008	0.003
110	96	0.014	0.013	0.021	0.009	0.002
...	..	.....	.....	.....	.....	.....
123	96	0.008	0.008	0.012	0.007	0.001
124	96	0.008	0.008	0.011	0.008	0.001

ORBGEN is adjusting all nine radiation pressure parameters (orbit model D2X from B049 from January 09, 2015) and stochastic pulses at noon: missing albedo and antenna thrust model is insufficiently compensated

Bernese GNSS Software, Version 5.2

Representation of CODE orbit solution from Jan. 10, 2015 by ORBGEN:

			QUADRATIC MEAN OF O-C (M)			
SAT	#POS	RMS (M)	TOTAL	RADIAL	ALONG	OUT
---	---	---	---	---	---	---
1	96	0.002	0.003	0.002	0.004	0.002
2	96	0.001	0.001	0.002	0.001	0.001
3	96	0.001	0.001	0.000	0.002	0.001
4	96	0.001	0.001	0.002	0.001	0.001
..	..	.....	.....	.....	.....	.....
32	96	0.001	0.000	0.000	0.001	0.000
101	96	0.001	0.001	0.000	0.001	0.000
102	96	0.001	0.002	0.001	0.003	0.000
...	..	.....	.....	.....	.....	.....
109	96	0.002	0.004	0.002	0.006	0.002
110	96	0.002	0.004	0.003	0.005	0.002
...	..	.....	.....	.....	.....	.....
123	96	0.002	0.015	0.006	0.026	0.001
124	96	0.002	0.007	0.003	0.012	0.001

ORBGEN is adjusting all nine radiation pressure parameters (orbit model D2X from B049 from January 09, 2015) and stochastic pulses every two hours to compensate the missing albedo and antenna thrust model

THANK YOU
for your attention

Publications of the satellite geodesy research group:

http://www.bernese.unibe.ch/publist