Chapter 1

Quarks and a unified theory of Nature fundamental forces

I. Antoniadis

Albert Einstein Center for Fundamental Physics, Institute for Theoretical Physics
Bern University, Sidlerstrasse 5 CH-3012 Bern, Switzerland
and Ecole Polytechnique, 91128 Palaiseau, France
antoniadis@itp.unibe.ch

Quarks were introduced 50 years ago opening the road towards our understanding of the elementary constituents of matter and their fundamental interactions. Since then, a spectacular progress has been made with important discoveries that led to the establishment of the Standard Theory that describes accurately the basic constituents of the observable matter, namely quarks and leptons, interacting with the exchange of three fundamental forces, the weak, electromagnetic and strong force. Particle physics is now entering a new era driven by the quest of understanding of the composition of our Universe such as the unobservable (dark) matter, the hierarchy of masses and forces, the unification of all fundamental interactions with gravity in a consistent quantum framework, and several other important questions. A candidate theory providing answers to many of these questions is string theory that replaces the notion of point particles by extended objects, such as closed and open strings. In this short note, I will give a brief overview of string unification, describe in particular how quarks and leptons can emerge and discuss what are possible predictions for particle physics and cosmology that could test these ideas.

1.1. Introduction

During the last few decades, physics beyond the Standard Model (SM) was guided from the problem of mass hierarchy. This can be formulated as the question of why gravity appears to us so weak compared to the other three known fundamental interactions corresponding to the electromagnetic, weak and strong nuclear forces. Indeed, gravitational interactions are suppressed by a very high energy scale, the Planck mass $M_P \sim 10^{19}$ GeV, associated to

source: https://doi.org/10.7892/boris.71320 | downloaded: 12.10.2024

a length $l_P \sim 10^{-35}$ m, where they are expected to become important. In a quantum theory, the hierarchy implies a severe fine tuning of the fundamental parameters in more than 30 decimal places in order to keep the masses of elementary particles at their observed values. The reason is that quantum radiative corrections to all masses generated by the Higgs vacuum expectation value (VEV) are proportional to the ultraviolet cutoff which in the presence of gravity is fixed by the Planck mass. As a result, all masses are "attracted" to become about 10^{16} times heavier than their observed values.

Besides compositeness, there are two main ideas that have been proposed and studied extensively during the last decades, corresponding to different approaches of dealing with the mass hierarchy problem. (1) Low energy supersymmetry with all superparticle masses in the TeV region. Indeed, in the limit of exact supersymmetry, quadratically divergent corrections to the Higgs self-energy are exactly cancelled, while in the softly broken case, they are cutoff by the supersymmetry breaking mass splittings. (2) TeV scale strings, in which quadratic divergences are cutoff by the string scale and low energy supersymmetry is not needed. Both ideas are experimentally testable at high-energy particle colliders and in particular at LHC. Below, I discuss their implementation in string theory.

The appropriate and most convenient framework for low energy supersymmetry and grand unification is the perturbative heterotic string. Indeed, in this theory, gravity and gauge interactions have the same origin, as massless modes of the closed heterotic string, and they are unified at the string scale M_s. As a result, the Planck mass M_P is predicted to be proportional to M_s:

$$M_P = M_s/g\,, \tag{1.1}$$

where g is the gauge coupling. In the simplest constructions all gauge couplings are the same at the string scale, given by the four-dimensional (4d) string coupling, and thus no grand unified group is needed for unification. In our conventions $\alpha_{\rm GUT} = g^2 \simeq 0.04$, leading to a discrepancy between the string and grand unification scale $M_{\rm GUT}$ by almost two orders of magnitude. Explaining this gap introduces in general new parameters or a new scale, and the predictive power is essentially lost. This is the main defect of this framework, which remains though an open and interesting possibility.[1]

The other idea has as natural framework of realization type I string theory with D-branes. Unlike in the heterotic string, gauge and gravitational interactions have now different origin. The latter are described again by closed strings, while the former emerge as excitations of open strings with

endpoints confined on D-branes.[2] This leads to a braneworld description of our universe, which should be localized on a hypersurface, i.e. a membrane extended in p spatial dimensions, called p-brane (see Fig. 1.1). Closed strings propagate in all nine dimensions of string theory: in those extended along the p-brane, called parallel, as well as in the transverse ones. On the contrary, open strings are attached on the p-brane. Obviously, our p-brane

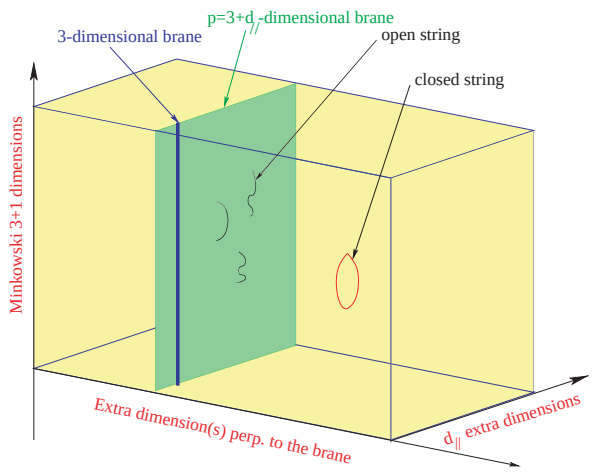

Fig. 1.1. In the type I string framework, our Universe contains, besides the three known spatial dimensions (denoted by a single blue line), some extra dimensions ($d_{\|} = p - 3$) parallel to our world p-brane (green plane) where endpoints of open strings are confined, as well as some transverse dimensions (yellow space) where only gravity described by closed strings can propagate.

world must have at least the three known dimensions of space. But it may contain more: the extra $d_{\|} = p - 3$ parallel dimensions must have a finite size, in order to be unobservable at present energies, and can be as large as $\mathrm{TeV}^{-1} \sim 10^{-18}$ m.[3] On the other hand, transverse dimensions interact with us only gravitationally and experimental bounds are much weaker: their size should be less than about 0.1 mm.[4]

1.2. Framework of low scale strings

In type I theory, the different origin of gauge and gravitational interactions implies that the relation between the Planck and string scales is not linear as (1.1) of the heterotic string. The requirement that string theory should be weakly coupled, constrain the size of all parallel dimensions to be of

order of the string length, while transverse dimensions remain unrestricted. Assuming an isotropic transverse space of $n = 9 - p$ compact dimensions of common radius $R_\perp$, one finds:

$$M_P^2 = \frac{1}{g^4} M_s^{2+n} R_\perp^n \ , \qquad g_s \simeq g^2 \, . \tag{1.2}$$

where g_s is the string coupling. It follows that the type I string scale can be chosen hierarchically smaller than the Planck mass at the expense of introducing extra large transverse dimensions felt only by gravity, while keeping the string coupling small.[5] The weakness of 4d gravity compared to gauge interactions (ratio M_W/M_P) is then attributed to the largeness of the transverse space $R_\perp$ compared to the string length $l_s = M_s^{-1}$.

An important property of these models is that gravity becomes effectively $(4+n)$-dimensional with a strength comparable to those of gauge interactions at the string scale. The first relation of Eq. (1.2) can be understood as a consequence of the $(4+n)$-dimensional Gauss law for gravity, with

$$M_*^{(4+n)} = M_s^{2+n}/g^4 \tag{1.3}$$

the effective scale of gravity in $4+n$ dimensions. Taking $M_s \simeq 1$ TeV, one finds a size for the extra dimensions $R_\perp$ varying from 10^8 km, .1 mm, down to a Fermi for $n = 1, 2$, or 6 large dimensions, respectively. This shows that while $n = 1$ is excluded, $n \geq 2$ is allowed by present experimental bounds on gravitational forces.[4,6] Thus, in these models, gravity appears to us very weak at macroscopic scales because its intensity is spread in the "hidden" extra dimensions. At distances shorter than $R_\perp$, it should deviate from Newton's law, which may be possible to explore in laboratory experiments (see Fig. 1.2).

The main experimental implications of TeV scale strings in particle accelerators are of three types, in correspondence with the three different sectors that are generally present: (i) new compactified parallel dimensions, (ii) new extra large transverse dimensions and low scale quantum gravity, and (iii) genuine string and quantum gravity effects. On the other hand, there exist interesting implications in non accelerator table-top experiments due to the exchange of gravitons or other possible states living in the bulk.

1.3. Large number of species

Here, we point out that low scale gravity with large extra dimensions is actually a particular case of a more general framework, where the UV cutoff is lower than the Planck scale due to the existence of a large number of

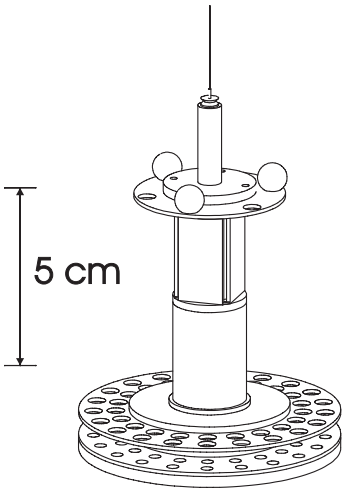

Fig. 1.2. Torsion pendulum that tested Newton's law at 55 μm.

particle species coupled to gravity.[7] Indeed, it was shown that the effective UV cutoff M_* is given by

$$M_*^2 = M_P^2/N \,, \tag{1.4}$$

where the counting of independent species N takes into account all particles which are not broad resonances, having a width less than their mass. The derivation is based on black hole evaporation but here we present a shorter argument using quantum information storage.[8] Consider a pixel of size L containing N species storing information. The energy required to localize N wave functions is then given by N/L, associated to a Schwarzschild radius $R_s = N/LM_P^2$. The latter must be less than the pixel size in order to avoid the collapse of such a system to a black hole, $R_s \leq L$, implying a minimum size $L \geq L_{min}$ with $L_{min} = \sqrt{N}/M_P$ associated precisely to the effective UV cutoff $M_* = L_{min}$ given in eq. (1.4). Imposing $M_* \simeq 1$ TeV, one should then have $N \sim 10^{32}$ particle species below about the TeV scale!

In the string theory context, there are two ways of realizing such a large number of particle species by lowering the string scale at a TeV:

(1) In large volume compactifications with the SM localized on D-brane stacks, as described in the previous section. The particle species are then the Kaluza-Klein (KK) excitations of the graviton (and other possible bulk modes) associated to the large extra dimensions, given by $N = R_\perp^n l_s^n$, up to energies of order $M_* \simeq M_s$.

(2) By introducing an infinitesimal string coupling $g_s \simeq 10^{-16}$ with the SM localized on Neveu-Schwarz NS5-branes in the framework of little strings.[9] In this case, the particle species are the effective number of string modes that contribute to the black hole bound:[10] $N = 1/g_s^2$ and gravity does not become strong at $M_s \sim \mathcal{O}(\text{TeV})$.

Note that both TeV string realizations above are compatible with the general expression (1.2), but in the second case there is no relation between the string and gauge couplings.

1.4. Standard Model on D-branes

The gauge group closest to the Standard Model one can easily obtain with D-branes is $U(3) \times U(2) \times U(1)$. The first factor arises from three coincident "color" D-branes. An open string with one end on them is a triplet under $SU(3)$ and carries the same $U(1)$ charge for all three components. Thus, the $U(1)$ factor of $U(3)$ has to be identified with *gauged* baryon number. Similarly, $U(2)$ arises from two coincident "weak" D-branes and the corresponding abelian factor is identified with *gauged* weak-doublet number. Finally, an extra $U(1)$ D-brane is necessary in order to accommodate the Standard Model without breaking the baryon number.[11] In principle this $U(1)$ brane can be chosen to be independent of the other two collections with its own gauge coupling. To improve the predictability of the model, we choose to put it on top of either the color or the weak D-branes.[12] In either case, the model has two independent gauge couplings g_3 and g_2 corresponding, respectively, to the gauge groups $U(3)$ and $U(2)$. The $U(1)$ gauge coupling g_1 is equal to either g_3 or g_2.

Let us denote by Q_3, Q_2 and Q_1 the three $U(1)$ charges of $U(3) \times U(2) \times U(1)$, in a self explanatory notation. Under $SU(3) \times SU(2) \times U(1)_3 \times U(1)_2 \times U(1)_1$, the members of a family of quarks and leptons have the following quantum numbers:

$$\begin{aligned}
&Q\ (\mathbf{3}, \mathbf{2}; 1, w, 0)_{1/6} \\
&u^c\ (\bar{\mathbf{3}}, \mathbf{1}; -1, 0, x)_{-2/3} \\
&d^c\ (\bar{\mathbf{3}}, \mathbf{1}; -1, 0, y)_{1/3} \\
&L\ (\mathbf{1}, \mathbf{2}; 0, 1, z)_{-1/2} \\
&l^c\ (\mathbf{1}, \mathbf{1}; 0, 0, 1)_1
\end{aligned} \tag{1.5}$$

The values of the $U(1)$ charges x, y, z, w will be fixed below so that they lead to the right hypercharges, shown for completeness as subscripts.

It turns out that there are two possible ways of embedding the Standard Model particle spectrum on these stacks of branes,[11] which are shown pictorially in Fig. 1.3. The quark doublet Q corresponds necessarily to a massless

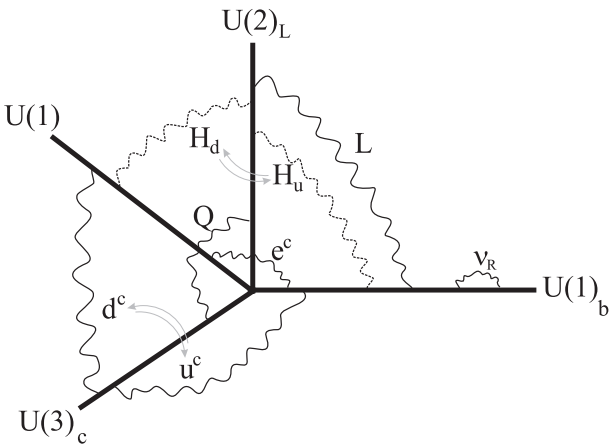

Fig. 1.3. A minimal Standard Model embedding on D-branes.

excitation of an open string with its two ends on the two different collections of branes (color and weak). As seen from the figure, a fourth brane stack is needed for a complete embedding, which is chosen to be a $U(1)_b$ extended in the bulk. This is welcome since one can accommodate right handed neutrinos as open string states on the bulk with sufficiently small Yukawa couplings suppressed by the large volume of the bulk.[13] The two models are obtained by an exchange of the up and down antiquarks, u^c and d^c, which correspond to open strings with one end on the color branes and the other either on the $U(1)$ brane, or on the $U(1)_b$ in the bulk. The lepton doublet L arises from an open string stretched between the weak branes and $U(1)_b$, while the antilepton l^c corresponds to a string with one end on the $U(1)$ brane and the other in the bulk. For completeness, we also show the two possible Higgs states H_u and H_d that are both necessary in order to give tree-level masses to all quarks and leptons of the heaviest generation.

1.4.1. *Hypercharge embedding and the weak angle*

The weak hypercharge Y is a linear combination of the three $U(1)$'s:

$$Y = Q_1 + \frac{1}{2}Q_2 + c_3 Q_3 \quad ; \quad c_3 = -1/3 \text{ or } 2/3\,, \tag{1.6}$$

where Q_N denotes the $U(1)$ generator of $U(N)$ normalized so that the fundamental representation of $SU(N)$ has unit charge. The corresponding $U(1)$ charges appearing in eq. (1.5) are $x = -1$ or 0, $y = 0$ or 1, $z = -1$, and $w = 1$ or -1, for $c_3 = -1/3$ or $2/3$, respectively. The hypercharge coupling g_Y is given by [a]:

$$\frac{1}{g_Y^2} = \frac{2}{g_1^2} + \frac{4c_2^2}{g_2^2} + \frac{6c_3^2}{g_3^2}\,. \tag{1.7}$$

It follows that the weak angle $\sin^2\theta_W$, is given by:

$$\sin^2\theta_W \equiv \frac{g_Y^2}{g_2^2 + g_Y^2} = \frac{1}{2 + 2g_2^2/g_1^2 + 6c_3^2 g_2^2/g_3^2}\,, \tag{1.8}$$

where g_N is the gauge coupling of $SU(N)$ and $g_1 = g_2$ or $g_1 = g_3$ at the string scale. In order to compare the theoretical predictions with the experimental value of $\sin^2\theta_W$ at M_s, we plot in Fig. 1.4 the corresponding curves as functions of M_s. The solid line is the experimental curve. The dashed line

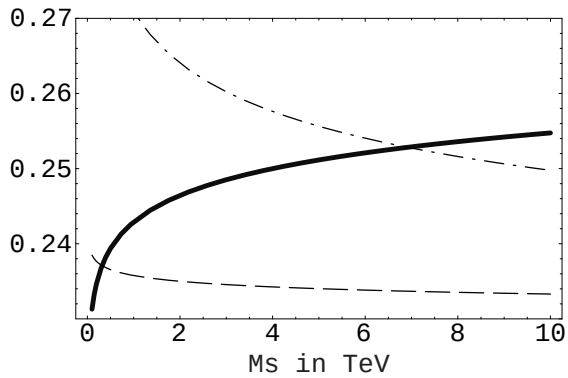

Fig. 1.4. The experimental value of $\sin^2\theta_W$ (thick curve), and the theoretical predictions (1.8).

is the plot of the function (1.8) for $g_1 = g_2$ with $c_3 = -1/3$ while the dotted-dashed line corresponds to $g_1 = g_3$ with $c_3 = 2/3$. The other two possibilities are not shown because they lead to a value of M_s which is too high to protect the hierarchy. Thus, the second case, where the $U(1)$ brane is on top of the color branes, is compatible with low energy data for $M_s \sim 6 - 8$ TeV and $g_s \simeq 0.9$.

[a]The gauge couplings $g_{2,3}$ are determined at the tree-level by the string coupling and other moduli, like radii of longitudinal dimensions. In higher orders, they also receive string threshold corrections.

From Eq. (1.8) and Fig. 1.4, we find the ratio of the $SU(2)$ and $SU(3)$ gauge couplings at the string scale to be $\alpha_2/\alpha_3 \sim 0.4$. This ratio can be arranged by an appropriate choice of the relevant moduli. For instance, one may choose the color and $U(1)$ branes to be D3 branes while the weak branes to be D7 branes. Then, the ratio of couplings above can be explained by choosing the volume of the four compact dimensions of the seven branes to be $V_4 = 2.5$ in string units. This being larger than one is consistent with the picture above. Moreover it predicts an interesting spectrum of KK states for the Standard model, different from the naive choices that have appeared hitherto: the only Standard Model particles that have KK descendants are the W bosons as well as the hypercharge gauge boson. However, since the hypercharge is a linear combination of the three $U(1)$'s, the massive $U(1)$ KK gauge bosons do not couple to the hypercharge but to the weak doublet number.

1.4.2. *The fate of $U(1)$'s, proton stability and neutrino masses*

It is easy to see that the remaining three $U(1)$ combinations orthogonal to Y are anomalous. In particular there are mixed anomalies with the $SU(2)$ and $SU(3)$ gauge groups of the Standard Model. These anomalies are cancelled by three axions coming from the closed string RR (Ramond) sector, via the standard Green-Schwarz mechanism.[14] The mixed anomalies with the non-anomalous hypercharge are also cancelled by dimension five Chern-Simmons type of interactions.[11] An important property of the above Green-Schwarz anomaly cancellation mechanism is that the anomalous $U(1)$ gauge bosons acquire masses leaving behind the corresponding global symmetries. This is in contrast to what would had happened in the case of an ordinary Higgs mechanism. These global symmetries remain exact to all orders in type I string perturbation theory around the orientifold vacuum. This follows from the topological nature of Chan-Paton charges in all string amplitudes. On the other hand, one expects non-perturbative violation of global symmetries and consequently exponentially small in the string coupling, as long as the vacuum stays at the orientifold point. Thus, all $U(1)$ charges are conserved and since Q_3 is the baryon number, proton stability is guaranteed.

Another linear combination of the $U(1)$'s is the lepton number. Lepton number conservation is important for the extra dimensional neutrino mass suppression mechanism described above, that can be destabilized by the presence of a large Majorana neutrino mass term. Such a term can be generated by the lepton-number violating dimension five effective operator

$LLHH$ that leads, in the case of TeV string scale models, to a Majorana mass of the order of a few GeV. Even if we manage to eliminate this operator in some particular model, higher order operators would also give unacceptably large contributions, as we focus on models in which the ratio between the Higgs vacuum expectation value and the string scale is just of order $\mathcal{O}(1/10)$. The best way to protect tiny neutrino masses from such contributions is to impose lepton number conservation.

A bulk neutrino propagating in $4+n$ dimensions can be decomposed in a series of 4d KK excitations denoted collectively by $\{m\}$:

$$S_{kin} = R_\perp^n \int d^4x \sum_{\{m\}} \left\{ \bar{\nu}_{Rm} \partial\!\!\!/ \nu_{Rm} + \bar{\nu}^c_{Rm} \partial\!\!\!/ \nu^c_{Rm} + \frac{m}{R_\perp} \nu_{Rm} \nu^c_{Rm} + c.c. \right\} , \tag{1.9}$$

where ν_R and ν_R^c are the two Weyl components of the Dirac spinor and for simplicity we considered a common compactification radius $R_\perp$. On the other hand, there is a localized interaction of ν_R with the Higgs field and the lepton doublet, which leads to mass terms between the left-handed neutrino and the KK states ν_{Rm}, upon the Higgs VEV v:

$$S_{int} = g_s \int d^4x H(x) L(x) \nu_R(x, y=0) \quad \rightarrow \quad \frac{g_s v}{R_\perp^{n/2}} \sum_m \nu_L \nu_{Rm} , \tag{1.10}$$

in strings units. Since the mass mixing $g_s v / R_\perp^{n/2}$ is much smaller than the KK mass $1/R_\perp$, it can be neglected for all the excitations except for the zero-mode ν_{R0}, which gets a Dirac mass with the left-handed neutrino

$$m_\nu \simeq \frac{g_s v}{R_\perp^{n/2}} \simeq v \frac{M_s}{M_p} \simeq 10^{-3} - 10^{-2} \text{ eV} , \tag{1.11}$$

for $M_s \simeq 1-10$ TeV, where the relation (1.2) was used. In principle, with one bulk neutrino, one could try to explain both solar and atmospheric neutrino oscillations using also its first KK excitation. However, the later behaves like a sterile neutrino which is now excluded experimentally. Therefore, one has to introduce three bulk species (at least two) ν_R^i in order to explain neutrino oscillations in a 'traditional way', using their zero-modes ν_{R0}^i.[15] The main difference with the usual seesaw mechanism is the Dirac nature of neutrino masses, which remains an open possibility to be tested experimentally.

1.5. Minimal Standard Model embedding

In this section, we perform a general study of SM embedding in three brane stacks with gauge group $U(3) \times U(2) \times U(1)$,[16] and present an explicit ex-

ample having realistic particle content and satisfying gauge coupling unification.[17] We consider in general non oriented strings because of the presence of the orientifold plane that gives rise to mirror branes. An open string stretched between a brane stack $U(N)$ and its mirror transforms in the symmetric or antisymmetric representation, while the multiplicity of chiral fermions is given by their intersection number.

The quark and lepton doublets (Q and L) correspond to open strings stretched between the weak and the color or $U(1)$ branes, respectively. On the other hand, the u^c and d^c antiquarks can come from strings that are either stretched between the color and $U(1)$ branes, or that have both ends on the color branes (stretched between the brane stack and its orientifold image) and transform in the antisymmetric representation of $U(3)$ (which is an anti-triplet). There are therefore three possible models, depending on whether it is the u^c (model A), or the d^c (model B), or none of them (model C), the state coming from the antisymmetric representation of color branes. It follows that the antilepton l^c comes in a similar way from open strings with both ends either on the weak brane stack and transforming in the antisymmetric representation of $U(2)$ which is an $SU(2)$ singlet (in model A), or on the abelian brane and transforming in the "symmetric" representation of $U(1)$ (in models B and C). The three models are presented pictorially in Fig. 1.5

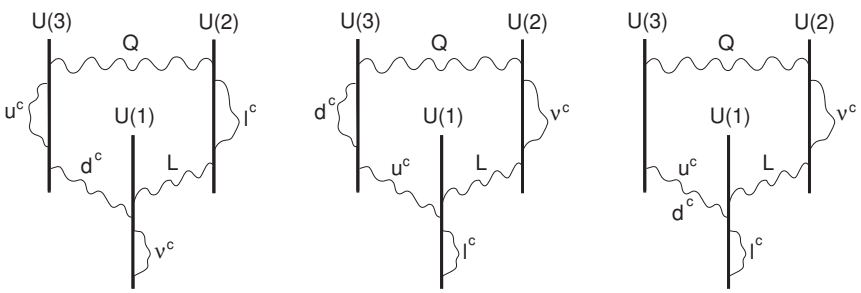

Fig. 1.5. Pictorial representation of models A, B and C

Thus, the members of a family of quarks and leptons have the following

quantum numbers:

$$
\begin{array}{rlll}
 & \text{Model A} & \text{Model B} & \text{Model C} \\
Q & (\mathbf{3},\mathbf{2};1,1,0)_{1/6} & (\mathbf{3},\mathbf{2};1,\varepsilon_Q,0)_{1/6} & (\mathbf{3},\mathbf{2};1,\varepsilon_Q,0)_{1/6} \\
u^c & (\bar{\mathbf{3}},\mathbf{1};2,0,0)_{-2/3} & (\bar{\mathbf{3}},\mathbf{1};-1,0,1)_{-2/3} & (\bar{\mathbf{3}},\mathbf{1};-1,0,1)_{-2/3} \\
d^c & (\bar{\mathbf{3}},\mathbf{1};-1,0,\varepsilon_d)_{1/3} & (\bar{\mathbf{3}},\mathbf{1};2,0,0)_{1/3} & (\bar{\mathbf{3}},\mathbf{1};-1,0,-1)_{1/3} \\
L & (\mathbf{1},\mathbf{2};0,-1,\varepsilon_L)_{-1/2} & (\mathbf{1},\mathbf{2};0,\varepsilon_L,1)_{-1/2} & (\mathbf{1},\mathbf{2};0,\varepsilon_L,1)_{-1/2} \\
l^c & (\mathbf{1},\mathbf{1};0,2,0)_{1} & (\mathbf{1},\mathbf{1};0,0,-2)_{1} & (\mathbf{1},\mathbf{1};0,0,-2)_{1} \\
\nu^c & (\mathbf{1},\mathbf{1};0,0,2\varepsilon_\nu)_{0} & (\mathbf{1},\mathbf{1};0,2\varepsilon_\nu,0)_{0} & (\mathbf{1},\mathbf{1};0,2\varepsilon_\nu,0)_{0}
\end{array}
\tag{1.12}
$$

where the last three digits after the semi-column in the brackets are the charges under the three abelian factors $U(1)_3 \times U(1)_2 \times U(1)$, that we will call Q_3, Q_2 and Q_1 in the following, while the subscripts denote the corresponding hypercharges. The various sign ambiguities $\varepsilon_i = \pm 1$ are due to the fact that the corresponding abelian factor does not participate in the hypercharge combination (see below). In the last lines, we also give the quantum numbers of a possible right-handed neutrino in each of the three models. These are in fact all possible ways of embedding the SM spectrum in three sets of branes.

The hypercharge combination is:

$$
\begin{aligned}
\text{Model A} \quad &: \quad Y = -\frac{1}{3}Q_3 + \frac{1}{2}Q_2 \\
\text{Model B, C} : \quad &: \quad Y = \frac{1}{6}Q_3 - \frac{1}{2}Q_1
\end{aligned}
\tag{1.13}
$$

leading to the following expressions for the weak angle:

$$
\begin{aligned}
\text{Model A} : \sin^2\theta_W &= \frac{1}{2 + 2\alpha_2/3\alpha_3} = \frac{3}{8}\bigg|_{\alpha_2=\alpha_3} \\
\text{Model B, C} : \sin^2\theta_W &= \frac{1}{1 + \alpha_2/2\alpha_1 + \alpha_2/6\alpha_3} \\
&= \frac{6}{7 + 3\alpha_2/\alpha_1}\bigg|_{\alpha_2=\alpha_3}
\end{aligned}
\tag{1.14}
$$

In the second part of the above equalities, we used the unification relation $\alpha_2 = \alpha_3$, that can be imposed if for instance $U(3)$ and $U(2)$ branes are coincident, leading to a $U(5)$ unified group. Alternatively, this condition can be generally imposed under mild assumptions.[17] It follows that model A admits natural gauge coupling unification of strong and weak interactions, and predicts the correct value for $\sin^2\theta_W = 3/8$ at the unification scale $M_{\rm GUT}$. On the other hand, model B corresponds to the flipped $SU(5)$ where

the role of u^c and d^c is interchanged together with l^c and ν^c between the **10** and $\bar{\mathbf{5}}$ representations.[18]

Besides the hypercharge combination, there are two additional $U(1)$'s. It is easy to check that one of the two can be identified with $B - L$. For instance, in model A choosing the signs $\varepsilon_d = \varepsilon_L = -\varepsilon_\nu = -\varepsilon_H = \varepsilon_{H'}$, it is given by:

$$B - L = -\frac{1}{6}Q_3 + \frac{1}{2}Q_2 - \frac{\varepsilon_d}{2}Q_1 \,. \tag{1.15}$$

Finally, the above spectrum can be easily implemented with a Higgs sector, since the Higgs field H has the same quantum numbers as the lepton doublet or its complex conjugate.

1.6. Conclusions

In this note, dedicated to 50 years after the proposal of quarks as elementary constituents of protons and neutrons, I gave a short overview of how they can emerge in string theory that provides a consistent quantum framework of unification of all fundamental forces of Nature, including gravity. String theory introduces a new fundamental energy scale associated with the string tension, or equivalently with the inverse string size. Its value can be high, near the four-dimensional Planck mass, compatible with traditional (supersymmetric) grand unification, or lower, up to the TeV scale providing an answer alternative to supersymmetry for solving the so-called hierarchy problem. The appropriate framework for such a realization is the (weakly coupled) type I theory of closed and open strings with D-branes. I have shown how the Standard Model can be embedded in such a framework.

References

1. Fore a review, see e.g. K. R. Dienes, Phys. Rept. **287** (1997) 447 [arXiv:hep-th/9602045]; and references therein.
2. C. Angelantonj and A. Sagnotti, *Phys. Rept.* **371** (2002) 1 [Erratum-ibid. **376** (2003) 339] [arXiv:hep-th/0204089].
3. I. Antoniadis, *Phys. Lett.* B **246** (1990) 377.
4. D. J. Kapner, T. S. Cook, E. G. Adelberger, J. H. Gundlach, B. R. Heckel, C. D. Hoyle and H. E. Swanson, Phys. Rev. Lett. **98** (2007) 021101.
5. N. Arkani-Hamed, S. Dimopoulos and G. R. Dvali, *Phys. Lett.* B **429** (1998) 263 [arXiv:hep-ph/9803315]; I. Antoniadis, N. Arkani-Hamed, S. Dimopoulos and G. R. Dvali, *Phys. Lett.* B **436** (1998) 257 [arXiv:hep-ph/9804398].
6. J. C. Long and J. C. Price, *Comptes Rendus Physique* **4** (2003) 337; R. S. Decca, D. Lopez, H. B. Chan, E. Fischbach, D. E. Krause and C. R. Jamell, *Phys. Rev. Lett.* **94** (2005) 240401; R. S. Decca et al., arXiv:0706.3283 [hep-ph]; S. J.

Smullin, A. A. Geraci, D. M. Weld, J. Chiaverini, S. Holmes and A. Kapitulnik, arXiv:hep-ph/0508204; H. Abele, S. Haeßler and A. Westphal, in 271th WE-Heraeus-Seminar, Bad Honnef (2002).

7. G. Dvali, arXiv:0706.2050 [hep-th]; Int. J. Mod. Phys. A **25** (2010) 602 [arXiv:0806.3801 [hep-th]]; G. Dvali and M. Redi, Phys. Rev. D **77** (2008) 045027 [arXiv:0710.4344 [hep-th]]; R. Brustein, G. Dvali and G. Veneziano, JHEP **0910** (2009) 085 [arXiv:0907.5516 [hep-th]].
8. G. Dvali and C. Gomez, Phys. Lett. B **674** (2009) 303.
9. I. Antoniadis and B. Pioline, *Nucl. Phys.* B **550** (1999) 41; I. Antoniadis, S. Dimopoulos and A. Giveon, JHEP **0105** (2001) 055 [arXiv:hep-th/0103033]; I. Antoniadis, A. Arvanitaki, S. Dimopoulos and A. Giveon, arXiv:1102.4043.
10. G. Dvali and D. Lust, arXiv:0912.3167 [hep-th]; G. Dvali and C. Gomez, arXiv:1004.3744 [hep-th].
11. I. Antoniadis, E. Kiritsis and T. N. Tomaras, *Phys. Lett.* B **486** (2000) 186; I. Antoniadis, E. Kiritsis, J. Rizos and T. N. Tomaras, *Nucl. Phys.* B **660** (2003) 81.
12. G. Shiu and S.-H. H. Tye, *Phys. Rev.* D **58** (1998) 106007; Z. Kakushadze and S.-H. H. Tye, *Nucl. Phys.* B **548** (1999) 180; L. E. Ibáñez, C. Muñoz and S. Rigolin, *Nucl. Phys.* B **553** (1999) 43.
13. K. R. Dienes, E. Dudas and T. Gherghetta, *Nucl. Phys.* B **557** (1999) 25 [arXiv:hep-ph/9811428]; N. Arkani-Hamed, S. Dimopoulos, G. R. Dvali and J. March-Russell, *Phys. Rev.* D **65** (2002) 024032 [arXiv:hep-ph/9811448]; G. R. Dvali and A. Y. Smirnov, *Nucl. Phys.* B **563** (1999) 63.
14. A. Sagnotti, *Phys. Lett.* B **294** (1992) 196; L. E. Ibáñez, R. Rabadán and A. M. Uranga, *Nucl. Phys.* B **542** (1999) 112; E. Poppitz, *Nucl. Phys.* B **542** (1999) 31.
15. H. Davoudiasl, P. Langacker and M. Perelstein, Phys. Rev. D **65** (2002) 105015 [arXiv:hep-ph/0201128].
16. I. Antoniadis, E. Kiritsis and T. N. Tomaras, Phys. Lett. B **486** (2000) 186 [arXiv:hep-ph/0004214]; I. Antoniadis, E. Kiritsis, J. Rizos and T. N. Tomaras, Nucl. Phys. B **660** (2003) 81 [arXiv:hep-th/0210263]; R. Blumenhagen, B. Kors, D. Lust and T. Ott, Nucl. Phys. B **616** (2001) 3 [arXiv:hep-th/0107138]; M. Cvetic, G. Shiu and A. M. Uranga, Nucl. Phys. B **615**, 3 (2001) [arXiv:hep-th/0107166]; I. Antoniadis and J. Rizos, 2003 unpublished work.
17. I. Antoniadis and S. Dimopoulos, Nucl. Phys. B **715**, 120 (2005) [arXiv:hep-th/0411032].
18. S. M. Barr, Phys. Lett. B **112** (1982) 219; J. P. Derendinger, J. E. Kim and D. V. Nanopoulos, Phys. Lett. B **139** (1984) 170; I. Antoniadis, J. R. Ellis, J. S. Hagelin and D. V. Nanopoulos, Phys. Lett. B **194** (1987) 231.