Belg. J. Zool. - Volume 129 (1999) - issue 1 - pages 43-60 - Brussels 1999

CAN ANCIENT COLOUR POLYMORPHISMS EXPLAIN WHY SOME CICHLID LINEAGES SPECIATE RAPIDLY UNDER DISRUPTIVE SEXUAL SELECTION?

OLE SEEHAUSEN, JACQUES J.M. VAN ALPHEN
AND FRANS WITTE
Institute of Evolutionary and Ecological Sciences, University of Leiden,
P.O. Box 9516, NL-2300 RA Leiden, The Netherlands,
seehausen@rulsfb.leidenuniv.nl

Abstract. It is not sufficiently understood why some lineages of cichlid fishes have proliferated in the Great Lakes of East Africa much more than anywhere else in the world, and much faster than other cichlid lineages or any other group of freshwater fish. Recent field and experimental work on Lake Victoria haplochromines suggests that mate choice-mediated disruptive sexual selection on coloration, that can cause speciation even in the absence of geographical isolation, may explain it. We summarize the evidence and propose a hypothesis for the genetics of coloration that may help understand the phenomenon. By defining colour patterns by hue and arrangement of hues on the body, we could assign almost all observed phenotypes of Lake Victoria cichlids to one of three female («plain», «orange blotched», «black and white») and three male («blue», «red-ventrum», «red-dorsum») colour patterns. These patterns diagnose species but frequently co-occur also as morphs within the same population, where they are associated with variation in mate preferences, and appear to be transient stages in speciation. Particularly the male patterns occur in almost every genus of the species flock. We propose that the patterns and their association into polymorphisms express an ancestral trait that is retained across speciation. Our model for male colour pattern assumes two structural loci. When both are switched off, the body is blue. When switched on by a cascade of polymorphic regulatory genes, one expresses a yellow to red ventrum, the other one a yellow to red dorsum. The expression of colour variation initiates speciation. The blue daughter species will inherit the variation at the regulatory genes that can, without new mutational events, purely by recombination, again expose the colour polymorphism, starting the process anew. Very similar colour patterns also dominate among the Mbuna of Lake Malawi. In contrast, similar colour polymorphisms do not exist in the lineages that have not proliferated in the Great Lakes. The colour pattern polymorphism may be an ancient trait in the lineage (or lineages) that gave rise to the two large haplochromine radiations. We propose two tests of our hypothesis.

INTRODUCTION

Why cichlid fishes have proliferated in the Great Lakes of East Africa (FRYER & ILES, 1972) much more than anywhere else in the world, and more than any other group of freshwater fish is not sufficiently understood. Morphological and molecular estimates of the phylogeny of the East African species flocks suggest that the species that now live in the three

main lake systems (Lake Victoria, Lake Tanganyika, Lake Malawi) have also evolved in their confines, and that, in the case of Lakes Victoria and Malawi, the entire flocks are derived from one or a few closely related ancestral species (LIPPITSCH, 1993 ; MEYER, 1993 ; NISHIDA, 1997). Explanations for the outstanding species richness, as well as for variation in richness between these and other lakes, and between different cichlid lineages in the lakes must be sought in lake- and lineage-specific variation in the relative rates of speciation and extinction. Understanding the relative contributions of the four possible factor combinations is important for understanding diversification in cichlids, and may contribute more generally to the understanding of causes of variation in animal species diversity.

Geological evidence strongly suggests that gross and net rates of speciation are extraordinarily high in some of the Great Lakes. The three Great Lakes differ considerably in age. Lake Tanganyika is the oldest, estimated at 9-12 My (COHEN *et al.*, 1993). Malawi is estimated at 1-2 My (FRYER & ILES, 1972). The basin of Lake Victoria is estimated at 0.25-0.75 My (FRYER, 1996), but the lake most likely dried up 200,000 years ago (MARTENS, 1997), and seems to have dried up again in the late pleistocene and filled up again only 13,200 (BEUNING *et al.*, 1997) to 12,400 (JOHNSON *et al.*, 1996) years ago (also STAGER *et al.*, 1986). Contradicting the expectation that species numbers increase over time, the younger lakes contain considerably more endemic cichlid species than the old Lake Tanganyika. Recent figures of known species stand at about 200 for Lake Tanganyika (SNOEKS *et al.*, 1994), compared with more than 500 for Lake Malawi (KONINGS, 1995), and about 500 for Lake Victoria (SEEHAUSEN, 1996). Notwithstanding that some biologists retained doubts that Lake Victoria had been entirely dry as recently as in the late pleistocene (FRYER, 1997), it is beyond doubt that, if the basin was not entirely dry, only a shallow though extensive swamp can have persisted, possibly with seasonal pools. Whether or not some endemic cichlid species survived the drought to spawn the modern species flock, speciation must have been truly explosive in Lake Victoria. Recent field and experimental work points to a possible explanation. Supporting a hypothesis based on earlier studies of Lake Malawi cichlids, mate choice-mediated disruptive sexual selection on coloration seems a suitable mechanism to cause speciation even in the absence of geographical isolation. In this paper we summarize the evidence and propose a hypothesis for the genetics of coloration that may help understand the phenomenon.

MATE CHOICE, SEXUAL SELECTION AND SPECIATION IN CICHLIDS

Most of the species-rich East African cichlid lineages possess polygynous mating systems in which females invest heavily in parental care (mouthbrooding) while males do not contribute to parental care. Sexual selection holds particular promise to explain elevated speciation rates in such situations (WEST-EBERHARD, 1983). The strongly asymmetric investment in parental care is conducive to sexual selection upon male secondary sexual characters. As predicted, many polygynous cichlids have sexually strongly dimorphic breeding coloration and sexually dimorphic courtship behaviour, and the most species-rich lineage of cichlids is polygynous (DOMINEY, 1984). These are the haplochromines with more than 1200 known species (KONINGS, 1995 ; TURNER, 1996 ; SEEHAUSEN, 1996 ; KAUFMAN *et al.*, 1997), that make up the entire endemic species flock of Lake Victoria and 99% of the endemic species in Lake

Malawi. Ecological field work and population genetical studies conducted in the late 70s and early 80s on two haplochromine taxa in Lake Malawi suggested the possibility of sympatric speciation via colour polymorphism associated with coloration-based mate selection (HOLZBERG, 1978; MARSH *et al.*, 1981; MCKAYE *et al.*, 1982, 1984).

The absence of intermediate colour morphs, and the lack of evidence for the predicted gradations in the degree of morph differentiation and isolation (MCKAYE *et al.*, 1982) may have contained the impact of these findings. Most authors continued to propagate various allopatric speciation models to explain the evolution of cichlid species flocks. Specifically, speciation in separate lake basins and in marginal lagoons (satellite lakes) has been proposed to explain the origin of the haplochromine species flock in Lake Victoria (FRYER & ILES, 1972; GREENWOOD, 1974; KAUFMAN & OCHUMBA, 1993; MEYER, 1993; FRYER, 1996; but see HOOGERHOUD *et al.*, 1983). We had argued that there are biological arguments for intralacustrine origin of species diversity, derived from distribution patterns and ecological specializations among the recent fauna (SEEHAUSEN, 1996: 269ff). This view received support (KAUFMAN *et al.*, 1997) after new geological evidence for a very recent desiccation (complete or incomplete), in combination with new data on the shape of the lake basin became available, that made a particularly strong case for speciation within one water body. Core evidence from the deepest part of the lake, together with seismic evidence, suggests a several millenia-long total desiccation of the lake that ended 13,000 to 12,400 years ago (JOHNSON *et al.*, 1996; BEUNING *et al.*, 1997). The implications for the palaeoclimate (nearly 50% of the rainfall in the region stems from lake-derived moisture) make it unlikely that satellite lakes could have persisted during the drought (JOHNSON *et al.*, 1996). Basin morphology rules out the existence of more than one basin when the lake filled up again (JOHNSON *et al.*, 1996). Palaeohydrological evidence rules out that lake level fluctuations since the refill, potentially causing allopatric speciation in satellite lakes, could account for any major part of the 500+ speciation events (BEUNING *et al.*, 1997). The largest satellite lake today (Lake Nabugabo) contains merely 5 endemic cichlid species despite the fact that it has been isolated from Lake Victoria for at least a third of the time that was available for the formation of the modern species flock of Lake Victoria (GREENWOOD, 1965). The case of the haplochromines in Lake Victoria, therefore, is a challenge to the conventional view (MAYR, 1963; PATERSON, 1985) that speciation occurs as a byproduct of population differentiation in geographical isolation. Although not of quite so recent origin, the species flock of Lake Malawi poses a similar challenge (TURNER, 1994). The water level of Lake Malawi has fluctuated much over the millenia but also in this case, the basin morphology rules out the possibility that the lake had ever been split into isolated subbasins (for sympatric origin of cichlid species flocks elsewhere see also SCHLIEWEN *et al.*, 1994).

However, given the lack of empirical demonstration of the mechanics of sympatric speciation in cichlid fish, many researchers remained reluctant to consider sympatric modes of speciation in cichlid species flocks. This has recently began to change. Speciation models, tailored to match the case of the haplochromine cichlids, suggest the possibility of rapid sympatric speciation under sexual selection (TURNER & BURROWS, 1995; PAYNE & KRAKAUER, 1997; VAN DOORN *et al.*, 1998). Patterns in species diversity and intraspecific polymorphisms, support this possibility now more strongly than before because evidence has been produced for gradations in the degree of isolation and differentiation of colour morphs,

from situations in which they are conspecific colour morphs to situations in which the same phenotypes behave as reproductively isolated species. Experimental studies of mate choice in polymorphic populations and among sympatric species, and genetics of polymorphisms, begin to make the mechanics of speciation visible, as we shall summarize:

NEW TESTS OF DOMINEY'S SEXUAL SELECTION AND HOLZBERG'S POLYMORPHISM HYPOTHESES

The hypothesis that colour and mate preference diversification are associated with speciation (DOMINEY, 1984) received support from comparative studies of patterns in colour variation and species diversity. A study of Lake Malawi haplochromines revealed that the evolution of male nuptial coloration is neither phylogenetically nor ecologically constrained (DEUTSCH, 1997). A study that used a consensus tree of the greater East African cichlid radiation, and information on coloration and ecology from a large number of species, revealed that male nuptial coloration has likely arisen under sexual selection and is evolving in frequent association with speciation in cichlid clades with a polygynous mating system (SEEHAUSEN *et al.*, 1999).

A systematic study combining anatomical and ecological evidence with a large data set on the geographical distribution and variation in coloration of more than 100 species of haplochromines from rocky habitats in southern Lake Victoria revealed patterns that are consistent with the hypothesis of HOLZBERG (1978) that colour diversification is the first step in speciation (SEEHAUSEN, 1996; SEEHAUSEN *et al.*, 1998a): (1) Closely related (= congeneric) species with identical geographical distribution usually have conspicuously different body coloration (usually red or yellow versus blue) but usually differ little in ecology. (2) Closely related species with different geographical distributions but considerable overlap, often differ only in fin coloration and do not differ much in ecology either. (3) Sympatric and allopatric species that are not closely related differ or do not differ in coloration but usually differ distinctly in ecology. (4) There are forms living sympatrically that differ in body coloration but differ neither anatomically nor ecologically. Breeding in captivity in four of such cases has demonstrated that these are conspecific colour morphs that are not, or only incompletely isolated (*Neochromis omnicaeruleus*, Seehausen & Bouton, 1998: four male and two female colour morphs obtained from breeding with a monomorphic pair; *N. greenwoodi,* Seehausen & Bouton, 1998, *Pundamilia pundamilia*, Seehausen & Bouton, 1998, *P. nyererei*, Witte-Maas & Witte, 1985: two male colour morphs obtained in single clutches). Field work has shown that what are interbreeding colour morphs in some localities can be isolated sibling species in other localities (SEEHAUSEN, 1997; SEEHAUSEN *et al.*, 1997).

Three predictions regarding mechanisms, yielded by the hypothesis that colour diversification is the first step in speciation, have been tested on a subset of the same Lake Victoria haplochromines, and partly also on Lake Malawi haplochromines. All three were supported by all tests done to date: (1) It has been shown that coloration affects intraspecific mate choice, such that colour polymorphism is associated with mate preference polymorphism, possibly exerting disruptive sexual selection on coloration (SEEHAUSEN, VAN ALPHEN & LANDE, unpubl.). (2) There is direct interspecific mate choice among closely related species (HOLZBERG, 1978; MARSH, *et al.*, 1981; SEEHAUSEN, 1997; KNIGHT *et al.*,

1998) in which coloration is important (SEEHAUSEN & VAN ALPHEN, 1998). (3) Closely related species are reproductively isolated only by mate choice (SEEHAUSEN *et al.*, 1998b).

If conspicuousness of, and diversity in coloration evolve under sexual selection, diversification of coloration is possible only where light conditions make colour variation visible. Three predictions regarding patterns, yielded by this hypothesis were also supported by tests: The underwater light regime (band width of the spectrum) is the ecological variable that explains most of the variation in the number of species that coexist at isolated rocky islands in Lake Victoria, most of the variation in the number of sympatric colour morphs within a species, and most of the variation in the distinctiveness of hue difference between sympatric species (SEEHAUSEN *et al.*, 1997). Hence, there is now strong support both for the hypothesis of speciation by sexual selection (DOMINEY, 1984) and for the hypothesis of speciation without geographical barriers via colour polymorphism (HOLZBERG, 1978).

SHORTCOMINGS OF THE SEXUAL SELECTION HYPOTHESIS

Recent reviews of the fish speciation literature showed that speciation rates of polygynous cichlids in large lakes did not seem generally different from those in monogamous cichlids or other fish taxa. Speciation rates of freshwater fish were found to be generally higher in lakes than in rivers, which may be due to frequent disruptive natural selection in lacustrine environments, which can lead to sympatric ecological speciation (SKULASON & SMITH, 1995; SCHLUTER, 1996). The haplochromines in Lakes Victoria and Malawi were the only striking exception (MCCUNE, 1997; SEEHAUSEN, 1999a, b). They speciated by one to several orders of magnitude faster than all other fish groups for which information was available, including other polygynous cichlids. As a direct consequence, close to two thirds of the currently known more than 2000 cichlid species belong to the haplochromine tribe, while the remaining species are distributed over 14 other tribes. This strongly implies effects of lineage-specific properties on speciation rates. Beyond those, environment-specific properties are strongly implicated too: haplochromines have undergone diversification only in some of the many lakes in which they occur (SEEHAUSEN *et al.*, 1997), and the riverine haplochromine sister taxa to the lacustrine species flocks have not undergone more diversification than other riverine cichlid lineages. African rivers harbour about 50 haplochromine species (GREENWOOD, 1979).

Hence, the explanation for the unique species richness of haplochromine species flocks has to be sought in lineage-specific properties that unfold their impact on diversification only under some extrinsic conditions. Mate choice based on coloration could be this property because the impact of sexual selection on coloration depends on visual conditions and predation regimes (ENDLER, 1991), and because both differ profoundly between lakes and rivers, and differ also between different lakes. Sympatric speciation due to disruptive sexual selection on coloration is predictably even faster than sympatric speciation due to disruptive natural selection because the mating system is directly under disruptive selection (WU, 1985; TURNER & BURROWS, 1995; PAYNE & KRAKAUER, 1997). When ecological opportunity is available – and the particular anatomy of cichlids makes it that it very often is (GALIS & DRUCKER, 1998) – speciation by disruptive sexual selection will proba-

bly speed up the adaptive radiation process by rapidly generating sympatric genetically isolated incipient species that can respond more quickly than can interbreeding resource utilization morphs to the disruptive natural selection. Because ecological differentiation that is sufficient for coexistence can be less discrete than ecological differentiation that would cause assortative mate choice (which is required for ecological speciation), species packing is expected to become more dense in taxa that speciate by disruptive sexual selection, provided that signal space (*e.g.* colour visibility and perception) does not limit signal diversification. Beyond causing speciation in sympatry, disruptive sexual selection has a role in maintaining reproductive isolation in sympatry between populations that have diverged in sympatry or allopatry. It is, therefore, suitable to explain the high speciation rates in haplochromines in lacustrine environments. Yet, alone it is insufficient because several other cichlid lineages (*Oreochromis* Günther, 1889, Ectodini, Tropheini) that share the same mating and parental care system with the Lake Victoria and Malawi haplochromines (polygynous ; female mouthbrooding), and also have sexually dimorphic coloration, do not share the high speciation rates with haplochromines. Moreover, the haplochromine species flocks in Lakes Victoria and Malawi live side by side with three other haplochromine lineages that are stunningly species poor : *Serranochromis* Regan, 1920, *Pseudocrenilabrus* Fowler, 1934 and *Astatoreochromis* Pellegrin, 1903†. Only one *Serranochromis* species lives in Lake Malawi, only one *Astatoreochromis* species and only one *Pseudocrenilabrus* species live in Lake Victoria.

A GENETICAL HYPOTHESIS DERIVED FROM PATTERNS OF COLOUR VARIATION

We propose that ancestral genetical colour polymorphisms exist in the rapidly radiated lineage(s), that are not present in others, and that this difference causes the difference in propensity to speciate under sexual selection. To describe colour patterns and categorize intra- and interspecific variation in female and male Lake Victoria haplochromines, we inspected more than 10,000 and photographed more than 1000 individuals of 120 species and an additional 11 female and 24 male colour morphs (females of 108 species and colour morphs, males of 138 species and colour morphs, subsequently referred to as « morphs »). More than 300 photos of most « morphs » have been published (SEEHAUSEN, 1996). Brightness and saturation in male coloration varied greatly between conspecific populations (SEEHAUSEN *et al.*, 1997) but colour pattern (arrangement of colours on the body) varied much less (SEEHAUSEN *et al.*, 1998a).

Defining colour patterns by hue and arrangement of hues on the body, hence not considering the melanophore systems (SEEHAUSEN *et al.*, 1999), we could assign 105 of the 108 female « morphs » to one of three female patterns, and 124 of the 136 male « morphs » to one of three male nuptial patterns (Table 1, Fig. 1). The female colour patterns were : (i) « Plain » : This is the most common colour pattern in females (96 « morphs »). It is a cryptic brownish pattern that varies in lightness, possibly depending on the background colour in the environment. (ii) « Orange blotched » (OB) : This is bright and conspicuous, consisting of dark brown blotches on bright orange or pink (8 «morphs»). (iii) « Black and white » (WB) : This is similarly bright and conspicuous and consists of black blotches on brownish to whitish (6 « morphs »). « OB »

and « WB » patterns also occur occasionally in males. The common male nuptial colour patterns were: (i) « Blue »: blue is the only hue on the entire flanks, including the head (66 « morphs »). (ii) « Red-ventrum »: the anteroventral region of the body (gill cover, chest and ventrum) is yellow, orange or red, the remainder of the flanks is yellow-green, blue or grey (35 « morphs »). (iii) « Red-dorsum »: the anterodorsal region of the body (head and dorsum) and the dorsal fin are yellow, orange or red, the remainder of the flanks is yellow-green or blue (26 « morphs »). The extension of the yellow-red patches in « red-dorsum » and « red-ventrum » is very variable. Even entirely yellow or red individuals can be assigned because the brightness center of the yellow-red coloration is distinctly anteroventrally or anterodorsally, and the dorsum or ventrum respectively is uncoloured. Both colour pattern trimorphisms, but that of the males in particular, are common also in various genera of Lake Victoria haplochromines that inhabit other habitats and were not included in this study.

TABLE 1

Distribution of female and male colour patterns over species of rock-dwelling haplochromines from Lake Victoria

All species are discussed in Seehausen (1996), many of which are still undescribed. Female patterns: P « plain », OB « orange blotched », WB « black and white blotched », Y « yellow »; male patterns: B « blue », Rv « red-ventrum », Rd « red-dorsum », others are written out in full. Melanic phenotypes that could not be assigned to a colour pattern are given as « Melanic ». Overall $n > 10{,}000$.

Species	*females*	*males*
Neochromis greenwoodi Seehausen & Bouton, 1998	P, OB	B, Rv, Rd
Neochromis omnicaeruleus Seehausen & Bouton, 1998	P, OB, WB	B, Rv, Rd
Neochromis 'unicuspid scraper'	P, OB	B
Neochromis 'yellow anal scraper'	P, OB	Rv
Neochromis 'orange anal picker'	P, OB	B
Neochromis rufocaudalis Seehausen & Bouton, 1998	P	B
Neochromis gigas Seehausen & Lippitsch, 1998	P	B
Neochromis 'short head nigricans'	P	B
Neochromis 'red tail giant scraper'	?	B
Neochromis 'black tail giant scraper'	?	B
Neochromis 'eastern blue scraper'	P	B
Neochromis 'long black'	P	B, Rv
Neochromis 'Bihiru scraper'	P	B
Neochromis 'large eye nigricans'	P	?
Neochromis 'pseudoblack'	P	Melanic
Mbipia mbipi Seehausen, Lippitsch & Bouton, 1998	P	B
Mbipia 'short scraper'	P	B
Mbipia 'large eye black'	P	B
Mbipia 'red anal blue'	P	B, Rd
Mbipia lutea Seehausen & Bouton, 1998	P	Rv
Mbipia 'red carp'	P	Rv
Mbipia 'orange carp'	P	Rv
Pundamilia 'Ukerewe'	P	B
Pundamilia azurea Seehausen & Lippitsch, 1998	P	B
Pundamilia 'pink anal'	P	B

Species	*females*	*males*
Pundamilia 'red rim anal'	P	B
Pundamilia 'Bwiru'	P	B
Pundamilia 'red anal'	P	B
Pundamilia pundamilia Seehausen & Bouton, 1998	P	B, Rv
Pundamilia 'big blue'	P	B, Rv, Rd
Pundamilia 'red head'	P	Rv
Pundamilia 'red flank'	?	Rv
Pundamilia 'all red'	?	Rv, Rd
Pundamilia nyererei (Witte-Maas & Witte, 1985)	P	Rd, Melanic
Pundamilia igneopinnis Seehausen & Lippitsch, 1998	P	Rd, Melanic
Pundamilia 'lemon fin'	P	Rd
Pundamilia 'orange dorsal'	P	Rd
Pundamilia macrocephala Seehausen & Bouton, 1998	P	B
Pundamilia 'blue deepwater'	P	B
Pundamilia 'yellow deepwater'	P	Rd
Pundamilia 'slender deepwater'	P	Rd
Pundamilia 'orange anal'	P	Melanic
Pundamilia 'small mouth'	P	Melanic
Pundamilia 'all black'	?	Melanic
Lithochromis 'yellow chin'	P	B
Lithochromis 'Ukerewe'	?	B
Lithochromis 'black Ukerewe'	P	B
Lithochromis 'long snout'	P	B
Lithochromis rubripinnis Seehausen, Lippitsch & Bouton, 1998	P	B, Rd
Lithochromis 'scraper'	P	B, Rd
Lithochromis 'pseudoblue'	P	B, Rd
Lithochromis xanthopteryx Seehausen & Bouton, 1998	P, OB	Melanic, Rd
Lithochromis 'orange'	P	Rd
Lithochromis 'Gana'	?	Rd
Lithochromis rufus Seehausen & Lippitsch, 1998	P	Rv
Haplochromis 'blue obliquidens'	P	B
Haplochromis lividus Greenwood, 1956	P	Rv
Haplochromis 'orange chest silvery scraper'	P	Rv
Haplochromis 'purple yellow'	P	Rd
Haplochromis 'red back scraper'	P	Rd
Ptyochromis 'striped rock sheller'	?	B
Ptyochromis 'Zue sheller'	P	B
Ptyochromis sauvagei (Pfeffer, 1896)	P, WB	B, Rv
Ptyochromis xenognathus (Greenwood, 1957)	P	B, Rv
Ptyochromis 'deep water rock sheller'	P	B, Rd
Ptyochromis 'red giant sheller'	P	Rv
Ptyochromis 'red rock sheller'	P	Rv
Macropleurodus bicolor (Boulenger, 1906)	P, WB	Rv
Paralabidochromis chilotes (Boulenger, 1911)	P, WB	B, Rv
Paralabidochromis 'short head chilotes'	P	Rv
Paralabidochromis cf. chromogynos (Greenwood, 1959)	WB	?

Species	*females*	*males*
Paralabidochromis 'pointed jaw chromogynos'	?	B
Paralabidochromis 'fleshy lips'	P	B
Paralabidochromis 'long teeth'	WB	?
Paralabidochromis 'short snout scraper'	P	B
Paralabidochromis 'blue short snout scraper'	P	B
Paralabidochromis 'red short snout scraper'	P	Rv
Paralabidochromis 'elongate short snout scraper'	P	Rv
Paralabidochromis 'rock macula'	Y	Rv
Paralabidochromis 'rockkribensis'	Y	Rv
Paralabido. plagiodon (Regan & Trewavas, 1928)	P	Rv
'Haplochromis' cyaneus Seehausen, Bouton & Zwennes, 1998	P	B
'Haplochromis' 'Zue rockpicker'	P	B
'Haplochromis' 'rockpicker'	P	B
'Haplochromis' 'elongate rockpicker'	?	B
'Haplochromis' 'orange anal picker'	P	B
'Haplochromis' 'sky blue picker'	?	B, Rd
'Haplochromis' 'pseudorockpicker'	P	B, Rd
'Haplochromis' flavus Seehausen, Zwennes & Lippitsch, 1998	P	Rv, B
'Haplochromis' 'red pseudorockpicker'	?	Rv
'Haplochromis' 'chessboard picker'	?	Rv
Psammochromis riponianus (Boulenger, 1911)	P	B
Psammochromis 'blue sharp snout'	?	B
Psammochromis 'rock riponianus'	P	Grey
Psammochromis saxicola (Greenwood, 1960)	P	Grey
Psammochromis aelocephalus (Greenwood, 1959)	P	Rv
Psammochromis 'red Zebra'	?	Rv
Psammochromis 'Ruti-Psammo'	P	?
Psammochromis 'striped crusher'	P	?
Psammochromis 'yellow giant crusher'	?	Rv
Lipochromis cryptodon (Greenwood, 1959)	?	B
Lipochromis 'velvet black cryptodon'	OB	B
Lipochromis 'blue microdon'	?	B
Lipochromis cf. melanopterus (Trewavas, 1928)	P, OB	Rv
Lipochromis 'nyererei paedophage'	?	Rd
Lipochromis 'matumbi hunter'	P	Grey
Harpagochromis serranus (Pfeffer, 1896)	P	B
Harpagochromis 'big blue hunter'	P	B
Harpagochromis howesi (Van Oijen, 1992)	P	B
Harpagochromis 'orange rock hunter'	P	Rv
Harpagochromis cavifrons (Hilgendorf, 1888)	Blotched	?
'Astatotilapia' nubila (Boulenger, 1906)	P	B
'Astatotilapia' 'incurved dorsal head profile'	P	B
'Astatotilapia' 'large brownae'	P	B
'Astatotilapia' 'black long snout'	P	Melanic
'Astatotilapia' 'black cave'	?	Rd
'Haplochromis' 'brown narrow snout'	?	Rd
'Haplochromis' 'orange belly'	?	Rv
'Haplochromis' 'pale egg dummy'	?	Grey
'Haplochromis' 'stone'	P	B, Rd

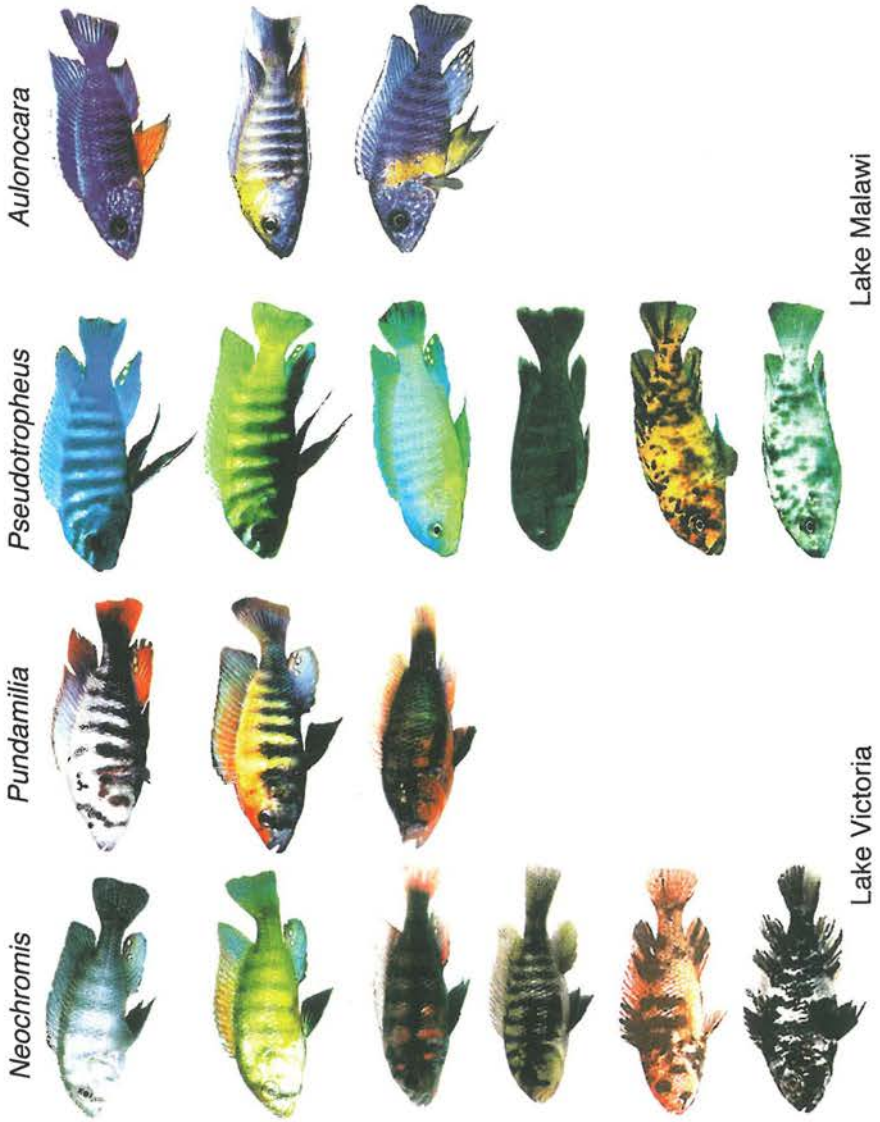
Aulonocara
Pseudotropheus
Pundamilia
Neochromis
Lake Malawi
Lake Victoria

Colour patterns that are very similar are common also among Lake Malawi haplochromines, in particular in the Mbuna species flock including the species of the genus *Aulonocara* Regan, 1922 (Fig. 1 ; photos in KONINGS, 1995, *e.g.* : *Pseudotropheus tropheops* Regan, 1922 species complex on pp. 30, 31 ; *P. zebra* (Boulenger, 1899) species complex on pp. 48, 49, 54, 55 ; *Cynotilapia* Regan, 1922 species on pp. 106-107 ; *Petrotilapia* Trewavas, 1935 species on pp. 72, 73 ; *Labeotropheus* Abel, 1927 species on pp. 27, 131), with two differences : (1) colour patches that are red in Lake Victoria are generally yellow in Lake Malawi ; (2) the genetical basis of WB-like female coloration in the Lake Malawi species flock is likely to be different from that of WB coloration in the Lake Victoria flock. Heterozygous females look similar in both cases but homozygous females in Lake Victoria become almost black, while homozygotes in Lake Malawi seem to become white. Two studies that quantified interspecific hue variation in male Mbuna, though not considering distribution of hue patches on the body, found a strikingly bimodal distribution of hue in colour space, where most species were dominated by blue or yellow (MCELROY *et al.*, 1991 ; DEUTSCH, 1997). Functional explanations for the haplochromine colour patterns are given elsewhere (SEEHAUSEN, 1999b).

Experimental and systematic studies have demonstrated that in Lake Victoria haplochromines, all these colour patterns that can diagnose species frequently co-occur in one population (SEEHAUSEN, 1996 ; SEEHAUSEN & BOUTON, 1996 ; SEEHAUSEN *et al.*, 1998a ; and unpublished data mentioned above in the section « new tests... »). In 18 of the studied species, populations were polymorphic for male nuptial colour pattern, three additional species had different male nuptial colour patterns in different populations, and populations in 10 species were polymorphic for female colour pattern (Table 1). As summarized above, laboratory studies demonstrated that sympatric occurrence of several male nuptial colour patterns is associated with variation in female mate preferences within (SEEHAUSEN, 1999a ; SEEHAUSEN, VAN ALPHEN & WITTE, unpubl.) and between species (KNIGHT *et al.*, 1998 ; SEEHAUSEN and VAN ALPHEN, 1998), and sympatric occurrence of female colour pat-

---

Legend to the figure (see page 52)

Fig. 1. – Representatives of the male and female colour patterns from two ecologically different genera of the Lake Victoria species flock and two ecologically different genera of the Lake Malawi species flock. Columnwise from left to right and from top to bottom.

– Column 1 (*Neochromis*, algae scrapers from Lake Victoria) : *N. omnicaeruleus* «blue» male, *N. omnicaeruleus* «red-dorsum» male, *N.* spec. «long black» «red-ventrum» male, *N. omnicaeruleus* « plain » female, *N. omnicaeruleus* «OB» female, *N. omnicaeruleus* «WB» female.

– Column 2 (*Pundamilia*, macroinvertebrate and plankton eaters from Lake Victoria) : *P. pundamilia* «blue» male, *P. nyererei* «red-dorsum» male, *P.* spec. «red head» «red-ventrum» male.

– Column 3 (*Pseudotropheus* Regan 1922, algae scrapers from Lake Malawi) : *P. zebra* «blue» male, *P.* spec. «zebra gold» «yellow-dorsum» male, *P.* spec. «aurora yellow » « yellow-ventrum» male, *P. zebra*, « plain » female, *P. estherae* Konings 1995 «OB» female, *P. callainos* Stauffer & Herf, 1992 «WB» female.

– Column 4 (*Aulonocara*, macroinvertebrate eaters from Lake Malawi) : *A. stuartgranti* Meyer & Riehl 1985 «blue» male, *A. jacobfreibergi* (Günther, 1889) «red-dorsum» male, *A. stuartgranti* «red-ventrum» male. The photos of Lake Malawi cichlids are reproduced with permission from KONINGS (1995).

terns is associated with variation in male mate preferences within (SEEHAUSEN, VAN ALPHEN & LANDE, unpubl.) and between species (HOLZBERG, 1978; KNIGHT & TURNER, pers. comm.). The degree of isolation and differentiation between colour morphs varies between localities in Lake Victoria, ranging from little to distinct differentiation with complete isolation (SEEHAUSEN, 1997; SEEHAUSEN *et al.*, 1997, SEEHAUSEN, VAN ALPHEN & LANDE, unpubl.).

Studies of colour variation in relation to geographical distribution, conducted in Lake Victoria, show that when closely related species are sympatric in their entire distribution range, they more often than closely related species with different distribution ranges exhibit alternative colour patterns, where one has «blue» males and the other one «red-dorsum» or «red-ventrum» males, or where one has «OB» or «WB» females and the other one does not (SEEHAUSEN, 1999b). Altogether, this implies that the two commonly observed and widely distributed colour polymorphisms that we describe, can be transient stages in sympatric speciation by disruptive sexual selection. As far as published information allows conclusions, this hypothesis is also supported by the distributions of colour patterns over closely related sympatric species among the Mbuna of Lake Malawi (KONINGS, 1995[1]), and by population genetical studies on one sibling species complex the species of which differ in male nuptial colour patterns (MCKAYE *et al.*, 1982), and another one the species of which differs in female colour patterns (MCKAYE *et al.*, 1984).

The stereotypic recurrence of colour patterns and their stereotypic associations into polymorphisms in various genera of Lake Victoria haplochromines, and even in the Mbuna of Lake Malawi, is peculiar. It is difficult to imagine that it would have evolved over and over again in all genera of endemic Lake Victoria cichlids and Lake Malawi Mbuna. It would be easier to understand if patterns and polymorphisms were ancestral traits of the lineage (or lineages) that gave rise to the two big radiations. That a polymorphism could cause speciation and yet be retained through large radiations is paradoxical. However, it does not need to be contradictory. Studies on the genetics of haplochromine coloration revealed epistatic interactions between structural and regulatory genes, where the latter influence expression of the structural genes (fin coloration of haplochromines [KORNFIELD 1991]; «WB» and «OB» female colour pattern polymorphism [SEEHAUSEN, VAN ALPHEN & LANDE, unpubl.]). From ongoing experiments we have indications that similar epistatic gene interactions may also be involved in male nuptial colour pattern polymorphism.

We propose here a hypothesis for the genetics underlying male nuptial colour polymorphism that is suitable to explain the retention of the polymorphism through speciation events that are caused by its very presence. A similar model may be relevant also for female

(1) KONINGS (1995) gives distribution maps of *Labeotropheus* species. At eight localities he found two species living sympatrically. At all but one place the sympatric species display alternative hue patterns. At six places a yellow-ventral species coexists with a blue species, at one West coast locality a yellow-ventral species (*L. fuelleborni* Ahl, 1927) coexist with a yellow-dorsal species (*L. trewavasae* Fryer, 1956), and at another West coast locality two blue species were found together. (Yellow-ventral from the East coast was assigned to *L. trewavasae*, and blue from the East coast to *L. fuelleborni* while the reverse is true among the West coast fishes, except for the one blue population of *L. fuelleborni*). Numerous other examples can be found in Konings' book.

colour polymorphisms. If the three male colour patterns are coded for by non-allelic structural genes, that are switched on or off by cascades of regulatory genes, the retention of the polymorphism as a «trait of speciation» becomes plausible. Our model assumes two structural loci, one of which, when switched on, expresses a yellow-red ventrum, and the other one a yellow-red dorsum. When both are switched off, the body is entirely blue. These structural genes are switched on by a cascade of polymorphic regulatory genes as a consequence of recombination (Fig. 2). Expression of the structural genes for « red-ventrum » and « red-dorsum » has consequences for the probability of mating with females that differ in their preferences for red and blue mates. Such preference variation has been found (SEEHAUSEN, 1999a), and could be due to variation in spectral sensitivity, or « wiring » in the eye and the brain, causing variation in individual perception of the male colours. The selective mating between red males and red-sensitive females, and blue males and blue-sensitive females would lead to speciation. Species of Lake Victoria haplochromines differ in their relative sensitivities to blue and red light (SMIT & ANKER, 1997).

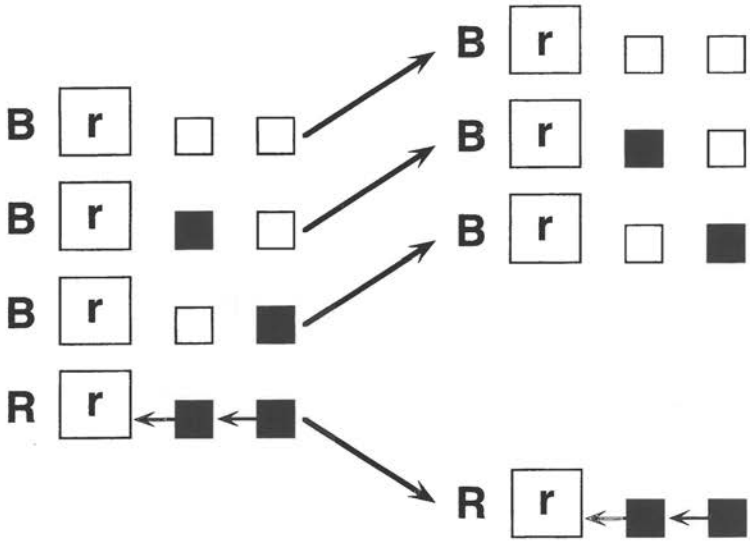

Fig. 2. – Schematic genetical model for persistance through speciation of the colour polymorphism that causes speciation. Boxes represent genes, lettres outside boxes represent planotypes Large boxes represent a structural gene complex for «red coloration» that is expressed (capital R) only when particular alleles at a number of polymorphic regulatory loci (small boxes) come together. If the structural gene is not expressed, the phenotype is blue (capital B). If females vary in their preference for blue and red, selective mating of blue males with blue-preferring females and red males with red-preferring females may lead to speciation. Both daughter species inherit the structural gene complex that causes colour variation when switched on in some and switched off in other individuals. While the red daughter species has lost the variation at the regulatory loci that can cause variation in expression of the structural gene, and mutational events would be required to restore it, the blue daughter species inherits the variation. New red morphs can be generated in the blue daughter species purely by recombination. The rate at which red morphs are produced will depend on the number of regulatory loci required to interact in order to express the structural gene, and on the number of alleles at these loci.

The structural genes for alternative colours that cause speciation when exposed, would be inherited by both daughter species. While the red daughter species has lost the variation at the regulatory loci that can cause this variation in expression of the structural genes, and mutational events would be required to restore it, the blue daughter species inherits the variation (Fig. 2). Selection would operate mainly upon the regulatory gene interaction while the structural gene complexes would be conserved (though variation in extension and hue of the yellow/red colour patches implies responsiveness to selection within the structural gene complexes). New red morphs, and therewith the variation in colour expression, that holds the potential to break up the sexual coherence of populations, can be generated in the blue daughter species purely by recombination.

Species of other lacustrine cichlid lineages can also be polymorphic for coloration. Several colour polymorphisms have been described by KOHDA *et al.* (1996) and are shown by KONINGS (1988), but none of the colour patterns involved resembles those associated with disruptive selection and sympatric speciation in Lake Victoria. Despite existence of intraspecific (SEEHAUSEN, 1996: 258 for *Astatoreochromis alluandi* Pellegrin, 1903; TWENTYMAN-JONES *et al.*, 1997 for *Pseudocrenilabrus philander* (Weber, 1897), and interspecific (GREENWOOD, 1979; 1989 for *Astatoreochromis* and *Pseudocrenilabrus*; SKELTON, 1993 for *Serranochromis*) colour variation in the haplochromine lineages that did not show any explosive diversification, the colour patterns and polymorphisms associated with disruptive sexual selection in Lake Victoria and Lake Malawi haplochromines appear to be also entirely absent from these lineages. In a detailed study of colour variation only one colour type of the genus *Pseudocrenilabrus* was found in any one lake in southern Africa despite a 16-30,000 years history (TWENTYMAN-JONES *et al.*, 1997). In contrast, even small lakes that are inhabited by haplochromines of the Lake Victoria lineage, such as crater lakes in Uganda, commonly have more than one sympatric colour type (L. and C. CHAPMAN, L.S. KAUFMAN & R. OAUTO-KWAYO, pers. comm.). We propose that this difference between species-poor and species-rich lineages in propensity to generate colour polymorphisms explains the difference in rates of speciation, and in resulting species richness under environmental conditions that are conducive to selection on coloration.

PROPOSED TESTS OF THE GENETICAL HYPOTHESIS

Our hypothesis ought to be tested by breeding experiments but also yields at least two explicit and testable predictions about phylogenetic patterns.

(1) The frequency of intraspecific colour polymorphism should differ between species with different predominant colour patterns. Polymorphisms should be more common in species that have the pattern with inherited epistatic variation at the regulatory gene level as their predominant pattern. Hence, species with « blue » as predominant male nuptial colour pattern should have red morphs more often than species with « red-ventrum » or « red-dorsum » as predominant colour pattern should have « blue » morphs.

(2) The male nuptial colour polymorphism should have been present in the common ancestor of various genera of Lake Victoria cichlids, and possibly in the common ancestor of the species flocks of Lake Victoria and Lake Malawi (or the Mbuna of Lake Malawi).

ACKNOWLEDGEMENTS

We thank the Tanzanian Commission for Science and Technology for the research permit for OS, the Tanzanian Fisheries Research Institute (Prof. P.O.J. Bwathondi, E.F.B. Katunzi) for hospitality and support, the Tanzanian Fisheries Division for permits to export live fishes; M.K.Kayeba, R. Enoka, A. Samwel-Terry, M. Haluna, P. Snelderwaard, J.C. Bergfeld and A. Rozier for technical assistance. G. Turner, R. Lande, J. Endler, M. Knight, F. Galis and N. Bouton for inspiring discussions; two anonymous referees for helpful comments; R. Kitery, H. Gonza Mbilinyi, H. Nielsen, A. Samwel-Terry for logistical support; M. Brittijn for making the figures; A. Konings (Cichlid Press) for kindly permitting us to reproduce his photos of Lake Malawi cichlids; WOTRO (grant no. 84-282) and NWO (grant no. 805-36.025) for financial support.

REFERENCES

BEUNING, K.R.M., K. KELTS & E. ITO (1997) – Paleaohydrology of Lake Victoria, East Africa, inferred from 18O/16O ratios in sediment cellulose. *Geology,* **25**: 1083-1086.

COHEN, A.S., M.J. SOREGHAN & C.A. SCHOLZ (1993) – Estimating the age of formation of lakes: an example from Lake Tanganyika, East African Rift system. *Geology*, **21**: 511-514.

DEUTSCH, J.C. (1997) – Colour diversification in Malawi cichlids: evidence for adaptation, reinforcement or sexual selection? *Biol. J. Linn. Soc.*, **62**: 1-14.

DOMINEY, W. (1984) – Effects of sexual selection and life history on speciation: species flocks in African cichlids and Hawiian Drosophila pp. 231-249. In: A.A. ECHELLE and I. KORNFIELD (eds.), *Evolution of Fish Species Flocks.* University of Maine Press, Orono.

ENDLER, J.A. (1991) – Variation in the appearance of guppy color patterns to guppies and their predators under different visual conditions. *Vision Res.*, **31**: 587-608.

FRYER, G. (1996) – Endemism, speciation and adaptive radiation in great lakes. *Env. Biol. Fish.*, **45**: 109-131.

FRYER, G. (1997) – Biological implications of a suggested Late Pleistocene desiccation of Lake Victoria. *Hydrobiologia*, **354**: 177-182.

FRYER, G. & T. D. ILES (1972) – *The Cichlid Fishes of The Great Lakes of Africa: Their Biology and Evolution.* Oliver and Boyd, London, 641 pp.

GALIS, F. & E.G. DRUCKER (1996) – Pharyngeal biting mechanics in centrachids and cichlids: Insights into a key evolutionary innovation. *J. Evol. Biol.*, **9**: 641-670.

GREENWOOD, P.H. (1965) – The cichlid fishes of Lake Nabugabo, Uganda. *Bull. Br. Mus. Nat. Hist. (Zool.)*, **12**: 315-357.

GREENWOOD, P.H. (1979) – Towards a phyletic classification of the «genus» *Haplochromis* (Pisces,Cichlidae) and related taxa. Part I: *Bull. Br. Mus. Nat. Hist., Zool.*, **35**: 265-322.

GREENWOOD, P.H. (1989) – The taxonomic status and phylogenetic relationships of *Pseudocrenilabrus* Fowler (Teleostei, Cichlidae). *Ichthyol. Bull. J.L.B. Smith Inst. Ichtyol.*, **54**: 16 pp.

HOLZBERG, S. (1978) – A field and laboratory study of the behaviour and ecology of *Pseudotropheus zebra* (Boulenger) an endemic cichlid of Lake Malawi (Pisces, Cichlidae). *Z. zool. Syst. Evolut.-forsch.*, **16**: 171-187.

HOOGERHOUD, R.J.C., F. WITTE & C.D.N. BAREL (1983) – The ecological differentiation of two closely resembling *Haplochromis* species from Lake Victoria (*H. iris* and *H. hiatus*; Pisces, Cichlidae). *Neth. J. Zool.*, **33**: 283-305.

JOHNSON, T.C., SCHOLZ, C.A., TALBOT, M.R., KELTS, K., RICKETTS, R.D., NGOBI, G., BEUNING, K., SSEMMANDA, I. & MCGILL, J.W. (1996) – Late pleistocene desiccation of Lake Victoria and rapid evolution of cichlid fishes. *Science*, **273** : 1091-1093.

KAUFMAN, L.S., L.J. CHAPMAN & C.A. CHAPMAN (1997) – Evolution in fast forward : haplochromine fishes of the Lake Victoria region. *Endeavour*, **21** : 23-30.

KNIGHT, M.E., G.F. TURNER, C. RICO, M.J.H. VAN OPEN & G.M. HEWITT (1998) – Microsatellite paternity analysis on captive Lake Malawi cichlids supports reproductive isolation by direct mate choice. *Molecular Ecology*, **7** : 1605-1610.

KOHDA, M., Y. YANAGISAWA, T. SATO, K. NAKAYA, Y. NIIMURA, K. MATSUMOTO & H. OCHI (1996) – Geographical colour variation in cichlid fishes at the southern end of Lake Tanganyika. *Env. Biol. Fish.*, **45** : 237-248.

KONINGS, A. (1988) – *Tanganyika Cichlids*. Verduijn Cichlids and Lake Fish Movies, Zevenhuizen, The Netherlands, 272 pp.

KONINGS, A. (1995) – *Malawi Cichlids in Their Natural Habitat*, 2nd edition. Cichlid Press, St. Leon-Rot, Germany, 352 pp.

KORNFIELD, I. (1991) – Genetics. In : Keenleyside, M.H.A. (ed), *Cichlid Fishes. Behaviour, Ecology and Evolution*, Chapman & Hall, London : 103-128.

LIPPITSCH, E. 1993. A phyletic study on lacustrine haplochromine fishes (Perciformes, Cichlidae) of East Africa, based on scale and squamation characters. *J. Fish Biol.*, **42** : 903-946.

MCELROY, D.M., I. KORNFIELD & J. EVERETT (1991) – Colouration in African cichlids : diversity and constraints in Lake Malawi endemics. *Neth. J. Zool.*, **41** : 250-268.

MCKAYE, K.R., T. KOCHER, P. REINTHAL, R. HARRISON & I. KORNFIELD (1984) – Genetic evidence for allopatric and sympatric differentiation among color morphs of a Lake Malawi cichlid fish. *Evolution*, 38 : 215-219.

MCKAYE, K.R., T. KOCHER, P. REINTHAL & I. KORNFIELD (1982) – A sympatric sibling species complex of *Petrotilapia* Trewavas from Lake Malawi analysed by enzyme electrophoresis (Pisces : Cichlidae). *Zool. J. Linn. Soc.*, **76** : 91-96.

MCCUNE, A. (1997) – How fast is speciation? Molecular, geological, and phylogenetic evidence from adaptive radiations of fishes. In : T.J. GIVNISH & K.J. SYTSMA (eds.), *Molecular Evolution and Adaptive Radiation*. Cambridge University Press., Cambridge : 585-610.

MARSH, A.C., A.J. RIBBINK & B.A. MARSH (1981) – Sibling species complexes in sympatric populations of *Petrotilapia* Trewavas (Cichlidae, Lake Malawi). *Zool. J. Linn. Soc.*, **71** : 253-264.

MARTENS, K. (1997) – Speciation in ancient lakes. *Trends Ecol. Evol.*, **12** : 177-181.

MAYR, E. (1963) – *Animal Species and Evolution*. Harvard University Press, Cambridge, MA.

MEYER, A. (1993) – Phylogenetic relationships and evolutionary processes in East African cichlid fishes. *Trends Ecol. Evol.*, **8** : 279-284.

NISHIDA, M. (1997) – Phylogenetic relationships and evolution of Tanganyikan cichlids : a molecular perspective. In : H. KAWANABE, M. HORI & N. MAKOTO (eds.), *Fish Communities in Lake Tanganyika*. Kyoto University Press, Kyoto : 1-23.

PATERSON, H.E.H. (1985) – The recognition concept of species. In : VRBA, E.S. (ed.). *Species and Speciation*. Transvaal Museum Monograph No. 4, Pretoria : 21-29.

PAYNE, R.J.H. & D.C. KRAKAUER (1997) – Sexual selection, space, and speciation. *Evolution*, **51** : 1- 9.

SCHLIEWEN, U.K., TAUTZ, D. & PAABO, S. (1994) – Sympatric speciation suggested by monophyly of crater lake cichlids. *Nature*, **368** : 629-633.

SCHLUTER, D. (1996) – Ecological speciation in postglacial fishes. *Phil. Trans. R. Soc. Lond.*, B, **351** : 807-814.

SEEHAUSEN, O. (1996) – *Lake Victoria Rock Cichlids. Taxonomy, Ecology and Distribution.* Verduijn Cichlids, Zevenhuizen, Netherlands, 304 pp.

SEEHAUSEN, O. (1997) – Distribution of, and reproductive isolation among, colour morphs of a rock-dwelling Lake Victoria cichlid (*Haplochromis nyererei*). *Ecol. Freshw. Fish.*, **6** : 59-66.

SEEHAUSEN, O. (1999a) – Explosive speciation rates and unusual species richness in haplochromine cichlids - effects of sexual selection. In : KAWANABE, H. & A. ROSSITER, *Biology in Ancient Lakes*. Biwa, Japan : in press.

SEEHAUSEN, O. (1999b) – *Speciation and Species Richness in African Cichlids – Effects of Sexual Selection by Mate Choice*. PhD thesis. University of Leiden, The Netherlands.

SEEHAUSEN, O. & VAN ALPHEN, J.J.M. (1998) – The effect of male coloration on female mate choice in closely related Lake Victoria cichlids (*Haplochromis nyererei* complex). *Behav. Ecol. Sociobiol.*, **42** : 1-8.

SEEHAUSEN, O., VAN ALPHEN, J.J.M. & WITTE, F. (1997) – Cichlid fish diversity threatened by eutrophication that curbs sexual selection. *Science*, **277** : 1808-1811.

SEEHAUSEN, O. & N. BOUTON (1996) – Polychromatism in rock dwelling Lake Victoria cichlids : types, distribution, and observations on their genetics. *The Cichlids Yearbook*, **6** : 36-45.

SEEHAUSEN, O., E. LIPPITSCH, N. BOUTON & H. ZWENNES (1998a) – Mbipi, the rock-dwelling cichlids of Lake Victoria : description of three new genera and 15 new species (Teleostei). *Ichthyol. Expl. Freshw.*, **9** : 129-228.

SEEHAUSEN, O., P.J. MAYHEW & J.J.M. VAN ALPHEN (1999) – Evolution of colour patterns in East African cichlid fish. *J. Evol. Biol.*, **12** : in press.

SEEHAUSEN, O., F. WITTE, J.J.M. VAN ALPHEN & N. BOUTON (1998b) – Direct mate choice maintains diversity among sympatric cichlids in Lake Victoria. *J. Fish Biol.*, **53** (suppl. A) : 37-55.

SKELTON, P. (1993) – *A Complete Guide to The Freshwater Fishes of Southern Africa.* Southern Book Publishers, South Africa and Tutorial Press, Zimbabwe, 388 pp.

SKULASON, S. & T.B. SMITH (1995) – Resource polymorphisms in vertebrates. *Trends Ecol. Evol.*, **10** : 366-370.

SMIT, S.A. & G. CH. ANKER (1997) – Photopic sensitivity to red and blue light related to retinal differences in two zooplanktivorous haplochromine species (Teleostei, Cichlidae). *Neth. J. Zool.*, **47** : 9-20.

SNOEKS, J., L. RUEBER & E. VERHEYEN (1994) – The Tanganyika problem : comments on the taxonomy and distribution patterns of its cichlid fauna. *Archiev der Hydrobiologie Beihefte Limnologie*, **44** : 355-372.

STAGER, J.C., P.N. REINTHAL & D.A. LIVINGSTONE (1986) – A 25,000-year history for Lake Victoria, East Africa, and some comments on its significance for the evolution of cichlid fishes. *Freshwat. Biol.* **16** : 15-19.

TURNER, G.F. (1994) – Speciation mechanisms in Lake Malawi cichlids : a critical review, *Archiev der Hydrobiologie Beihefte Limnologie*, **44** : 139-160.

TURNER, G.F. (1996) – Offshore Cichlids of Lake Malawi. Cichlid Press, Lauenau, Germany, 240 pp.

TURNER, G.F. & M.T. BURROWS (1995) – A model of sympatric speciation by sexual selection. *Proc. R. Soc. Lond.*, B, **260** : 287-292.

TWENTYMAN-JONES, V., A.J. RIBBINK & D. VOORVELT (1997) – Colour clues to incipient speciation of *Pseudocrenilabrus philander* (Teleostei, Cichlidae). *S. Afr. J. Sc.*, **93** : 529-537.

VAN DOORN, G.S., A.J. NOEST & P. HOGEWEG (1998) – Sympatric speciation and extinction driven by environment dependent sexual selection. *Proc. Roy. Soc. Lond.*, B, **265** : 1915-1919.

WEST-EBERHARD, M.J. (1983) – Sexual selection, social competition, and speciation. *Quart. Rev. Biol.*, **58**: 155-183.

WU, C. (1985) – A stochastic simulation study on speciation by sexual selection. *Evolution*, **39**: 66-82.